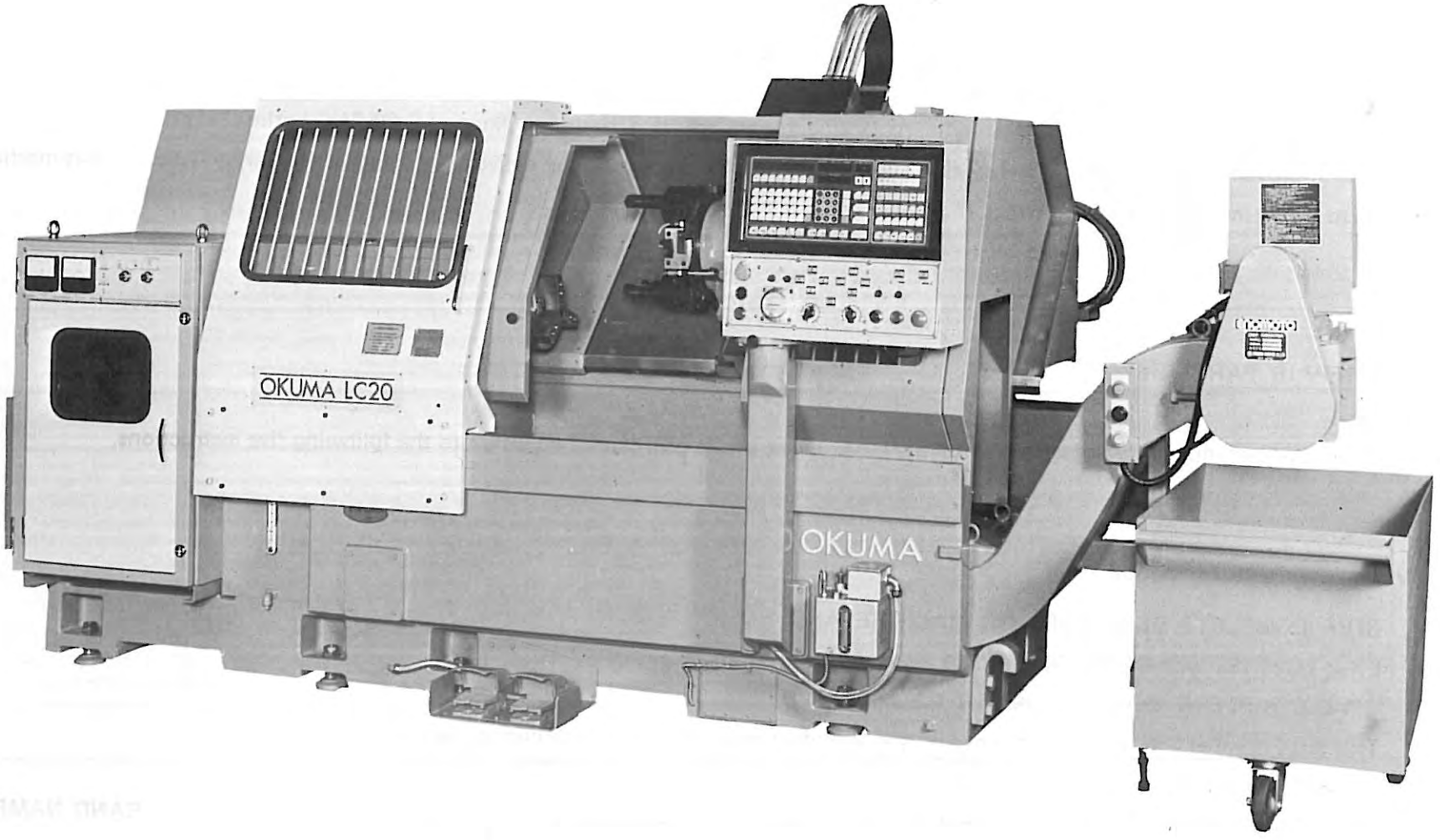

OKUMA Model LC20 CNC LATHE with OSP 3000L

2/22/1985 VEGA

PARTS BOOK

LC20 CNC LATHE

– CONTENTS –

SHEET NO.	ASSEMBLY NAME
1	BED AND BASE, – 1ST –
2	BED AND BASE, – 1SC/2ST –
3	DC MOTOR AND POSITION CODER
4	HEADSTOCK AND MAIN SPINDLE
5	HEADSTOCK GEAR SHIFTER
6	HEADSTOCK LUBRICATION
7	"HJA" HYDRAULIC POWER CHUCK AND "HYSR" CYLINDER
8	"HOS" HYDRAULIC HOLLOW CHUCK AND "YOSR" CYLINDER
9	UPPER CROSS-SLIDE AND X-AXIS BALL-SCREW
10	UPPER X-AXIS DRIVE UNIT
11	LOWER CROSS-SLIDE AND X-AXIS BALL-SCREW, – 2ST –
12	LOWER SADDLE AND X-AXIS DRIVE UNIT, – 2ST –
13	UPPER SADDLE AND Z-AXIS BALL-SCREW, – 1ST –
14	UPPER SADDLE AND Z-AXIS BALL-SCREW, – 2ST –
15	LOWER SADDLE AND Z-AXIS BALL-SCREW, – 2ST –
16	UPPER AND LOWER Z-AXIS DRIVE UNITS
17	SADDLE LUBRICATION
18	V8 UPPER TURRET (1)
19	V8 UPPER TURRET (2)

SHEET NO.	ASSEMBLY NAME
20	V8 UPPER TURRET COVER
21	V8 LOWER TURRET (1)
22	V8 LOWER TURRET (2)
23	V8 LOWER TURRET COVER
24	TOOLING (Qualified Turret, Inch System)
25	TOOLING (Qualified Turret, Metric System)
26	TAILSTOCK (1), – 1SC –
27	TAILSTOCK (2), – 1SC –
28	HYDRAULIC POWER UNIT
29	COOLANT NOZZLE (Upper Turret)
30	COOLANT NOZZLE (Lower Turret)
31	COOLANT SUPPLY EQUIPMENT
32	LEFT END COVER AND PTR
33	FRONT SLIDING CHIP GUARD, – 2ST –
34	COVER AND OTHER PARTS, – 2ST –
35	CHIP CONVEYOR
36	OPERATOR'S CONTROL PANEL, – 1ST –
37	OPERATOR'S CONTROL PANEL, – 1SC/2ST –
38	CHUCK AND TAILSTOCK PEDALS

SHEET NO. 1 BED AND BASE, – 1ST –

INDEX NO.	PART NO.	DESCRIPTION	Q'TY
1-1	C5000-080161	BOLT, 8 x 16	4
-2	127-0000-18-2	SUPPORT, hydraulic oil tank	1
-3	M1310-01103050	SHEET, rubber, M11 x M30 x 5	4
-4	C5000-160351	BOLT, 16 x 35	4
-5	127-0000-17	SUPPORT, control panel	1
-6	D5010-160251	BOLT, socket-head, 16 x 25	1
-7	C5000-160351	BOLT, 16 x 35	4
-8	127-0000-17	SUPPORT, control	1
-9	127-0001-01-5	BED, with bed	1
-10	D5010-160251	BOLT, socket-head, 16 x 25	1
-11	127-0003-23	WASHER	4
-12	C5010-160301	BOLT, socket-head, 16 x 30	4
-13	C5000-240601	BOLT, 24 x 60	8
-14	174-0010-01	HOOK, lifting	4
-15	127-0000-20-2	SUPPORT	1
-16	C5000-100201	BOLT, 10 x 20	4
-17	C5150-000101	WASHER, plain, 10	4
-18	117-0000-01	BOLT, jack	8
-19	117-0000-04	NUT	8
-20	108-0014-04-1	WASHER, foundation	8
-21	127-0001-05	BOLT	2
-22	127-0001-04	COVER	1
-23	C5040-008101	SCREW, pan-head, 8 x 10	4
-24	H0035-0002-01	BAND, pipe	1
-25	C5040-005081	SCREW, pan-head	1
-26	H1020-1028-87	PACKING, rubber	1
-27	127-0000-03	COVER	1
-28	C5040-005121	SCREW, pan-head, 5 x 12	10
-29	C7850-000042	PLUG, M	1
-30	127-0000-01-1	COVER	1
-31	C5040-005081	SCREW, pan-head, 5 x 8	4
-32	127-0000-01	COVER	1
-33	C5040-005081	SCREW, pan-head, 5 x 8	4
-34	127-0000-02-1	COVER	1
-35	C5040-005081	SCREW, pan-head, 5 x 8	4
-36	H0120-1028-87	PACKING, rubber	1
-37	127-0000-03	COVER	1
-38	C5040-005121	SCREW, pan-head, 5 x 12	10
-39	C5040-005081	SCREW, pan-head, 5 x 8	8
-40	127-0000-15	COVER	1
-41	C5010-050101	BOLT, socket-head, 5 x 10	2
-42	127-0000-14-4	BOX, terminal	1

SHEET NO. 1 BED AND BASE – 1ST –

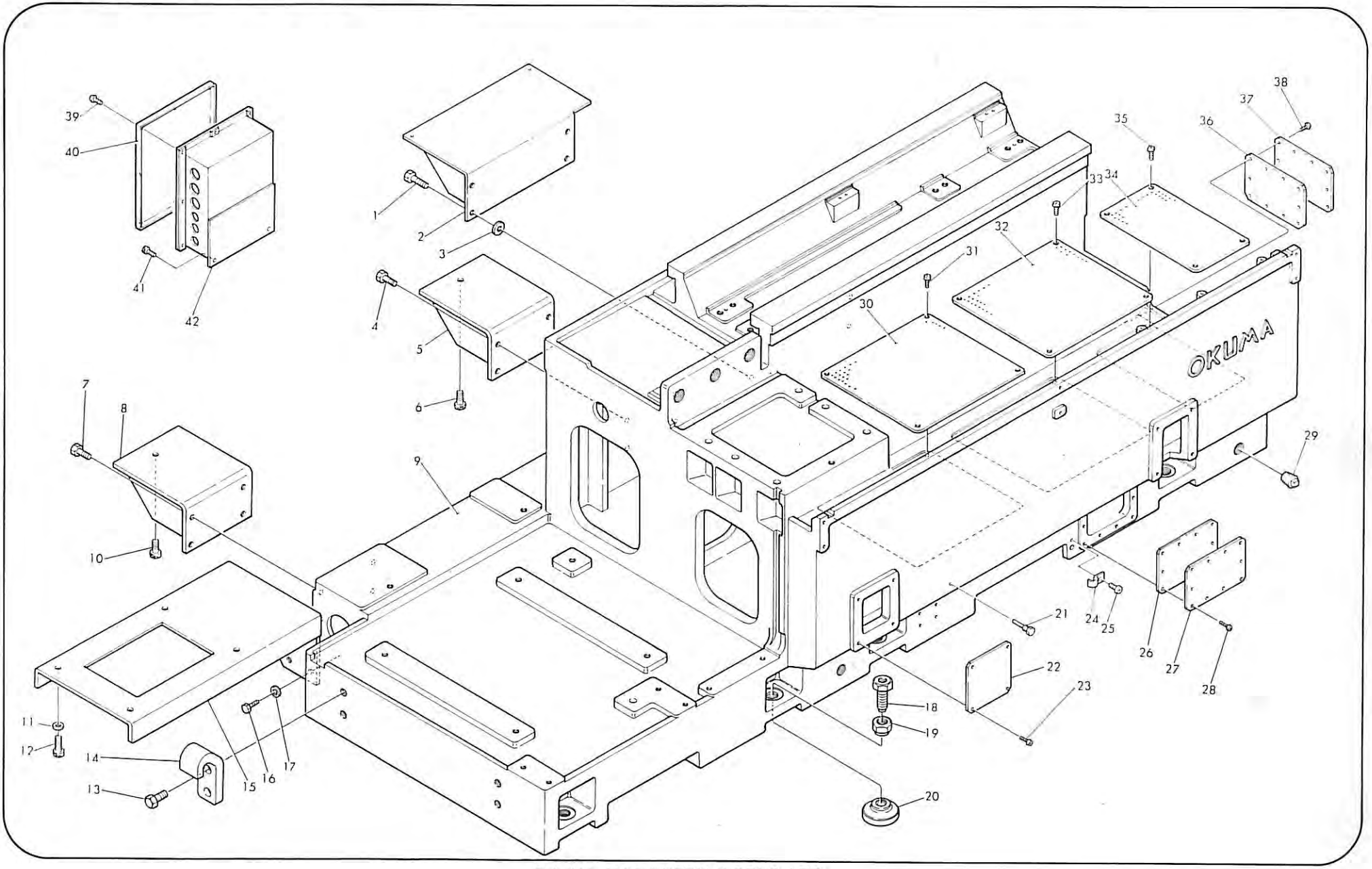

SHEET NO. 3 DC MOTOR AND POSITION CODER

INDEX NO.	PART NO.	DESCRIPTION	Q'TY
3-1	C5030-010101	SET-SCREW, flat-point, 10 x 10	3
-2	C5010-120351	BOLT, socket-head, 12 x 35	4
-3	C5010-120401	BOLT, socket-head, 12 x 40	2
-4	127-0100-02-1	COVER	1
-5	D7863-000042	PLUG, oil, 3/4	1
-6	D7864-000040	PACKING, rubber, 3/4	1
-7	M119-0005-04	POWER-ACE, 11/7.5, 15/11 kW, 3500 rpm, 3V 600	1
	M119-0002-38	POWER-ACE, 11/7.5, 15/11 kW, 2200 rpm, 3V 560	1
	M119-0005-22	POWER-ACE, 22/15 kW, 3500 rpm, 3V 600	1
-8	127-0020-02-3	BOLT	2
-9	127-0020-04	WASHER	2
-10	E1206-892-012	DC MOTOR, GEK-180LL 11/7.5 kW	1
	E1206-892-018	DC MOTOR, GEK-180LL 15/11 kW	1
	E1206-892-010	DC MOTOR, GEK-200LL 22/15 kW	1
	E1206-892-018	DC MOTOR, GEK-180LL 15/11 kW	1
	E1206-892-019	DC MOTOR, GEK-200LL 22/15 kW	1
-11	C5000-160451	BOLT, 16 x 45	1
-12	C5010-080161	BOLT, socket-head, 8 x 16	4
-13	127-0100-03-1	COVER	1
-14	C5030-008081	SET-SCREW, flat-point, 8 x 8	1
-15	C5000-160801	BOLT, 16 x 80	2
-16	127-0020-04	WASHER	2
-17	127-0020-01-3	BASE, motor, 11/7.5, 15/11 kW	1
	127-0020-05	BASE, motor, 22/15 kW	1
-18	C5000-120401	BOLT, 12 x 40, 11/7.5, 15/11 kW	4
	C5000-160451	BOLT, 16 x 45, 22/15 kW	4
-19	C5000-160601	BOLT, 16 x 60	6
-20	D5000-161101	BOLT, 16 x 110	3
-21	117-0000-01	BOLT, jack	3
-22	117-0000-04	NUT	3
-23	127-0131-04	PULLEY, 11/7.5, 15/11 kW, 2200 rpm	1
	127-0131-02-1	PULLEY, 11/7.5, 15/11 kW, 3500 rpm	1
	127-0131-05	PULLEY, 22/15 kW, 3500 rpm	1
-24	127-0150-01-1	SLEEVE, 11/7.5, 15/11 kW	1
	127-0150-03	SLEEVE, 22/15 kW	1
-25	127-0151-01-2	KEY, 11/7.5, 15/11 kW	1
	127-0151-02	KEY, 22/15 kW	1
-26	C5132-000651	NUT, shaft, 65, 11/7.5, 15/11 kW	1
	C5132-000751	NUT, shaft, 75, 22/11 kW	1
-27	C5152-000650	WASHER, lock, 65	1
	C5152-000751	WASHER, lock, 75	1
-28	127-0020-03-1	BOLT	1
-29	137-0001-02-1	SUPPORT	1

SHEET NO. 3 DC MOTOR AND POSITION CODER

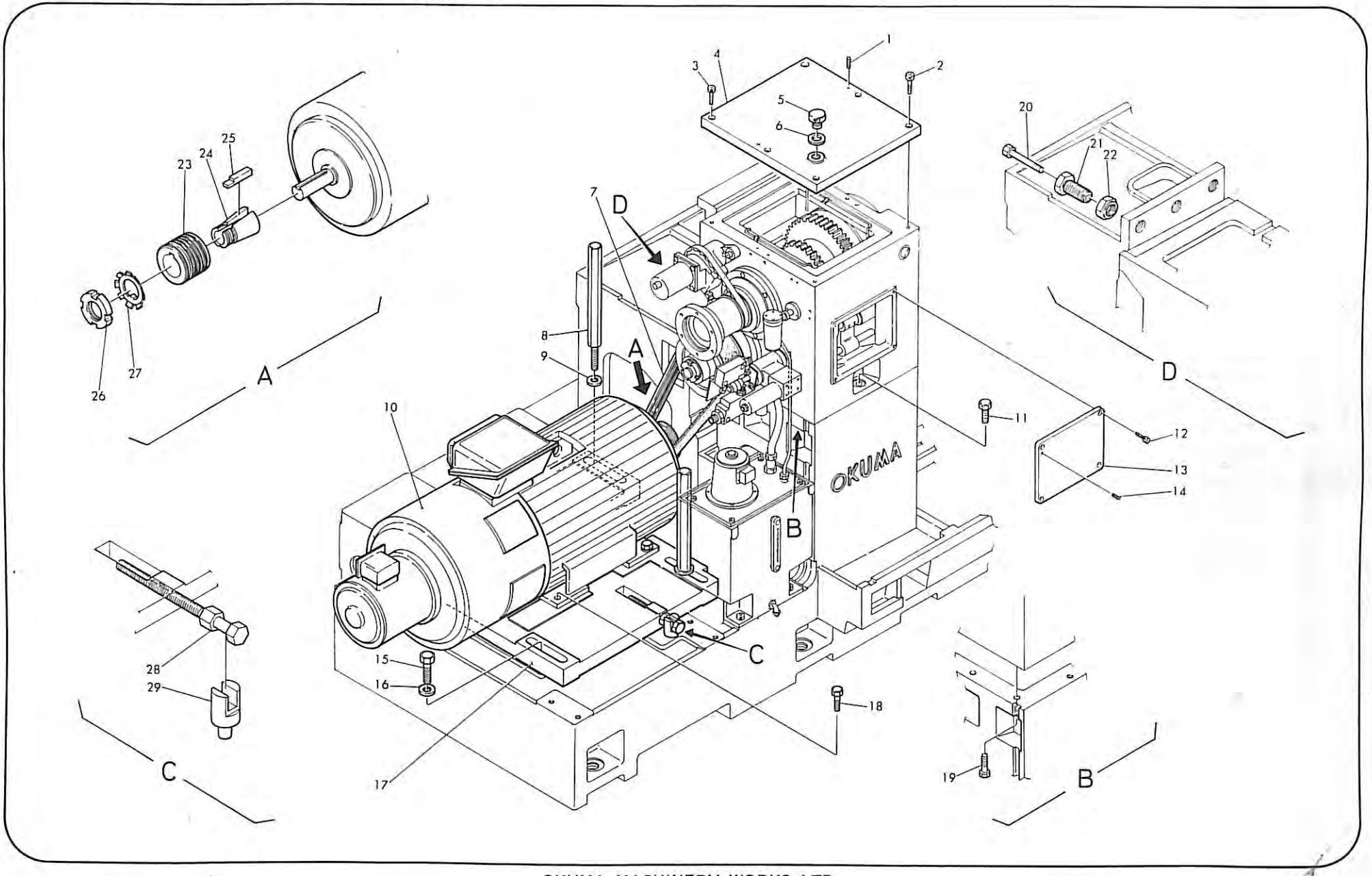

SHEET NO. 4 HEADSTOCK AND MAIN SPINDLE

INDEX NO.	PART NO.	DESCRIPTION	Q'TY
4-1	C5010-080161	BOLT, socket-head, 8 x 16	1
-2	123-3111-30	BLOCK	1
-3	123-3111-01-9	MAIN SPINDLE	1
-4	123-3112-13-1	KEY, C5170-151000 (15 x 10 x 100)	2
-5	C5201-006120	PIN, straight, 6 x 12	1
-6	123-3111-21-1	KEY, C5170-151100 (15 x 10 x 110)	1
-7	C5010-100501	BOLT, socket-head, 10 x 50	6
-8	127-0110-06	COVER	1
-9	D6101-307500	ROPE, rubber, 3 x 750	1
-10	127-0110-01-1	LABYRINTH	1
-11	127-0110-04-1	LABYRINTH	1
-12	M009-0008-20	BEARING, NSK, NN3020KMBCC1UPDU10	1
-13	127-0110-03	COLLAR	1
-14	M009-0008-22	BEARING, NSK, BT100-3DBG19OUPA	1
-15	127-0110-02	HOUSING	1
-16	C5030-008101	SET-SCREW, flat-point, 8 x 10	1
-17	F100-310-07940	O-RING, G80	1
-18	127-0100-04-1	COVER, blind	1
-19	C5132-000451	NUT, bearing, 45	1
-20	C5152-000450	WASHER, lock, 45	1
-21	M000-6209	BEARING, 6209	2
-22	127-0110-05	LABYRINTH	1
-23	127-0101-03-1	GEAR	1
-24	127-0101-04-1	GEAR	1
-25	C5153-001000	WASHER, lock, 100	1
-26	C5131-001001	NUT, lock, 100	1
-27	127-0101-02	GEAR	1
-28	127-0101-01	GEAR	1
-29	127-0100-01-1	HEADSTOCK	1
-30	123-3111-26-1	LABYRINTH	1
-31	127-0110-07-1	HOUSING	1
-32	M009-0008-21	BEARING, NSK, NN3017KMBCC1P4U10	1
-33	123-3111-27	COLLAR	1
-34	C5153-000850	WASHER, lock, 85	1
-35	C5131-000851	NUT, round, 85	1
-36	127-0110-08-1	COVER	1
-37	127-0110-09-1	COLLAR	1
-38	C5010-120451	BOLT, socket-head, 12 x 45	6
-39	127-0102-02-1	SHAFT	1
-40	C5171-007450	KEY, woodruff, 7 x 45	1
-41	C5181-000900	SNAP-RING, internal, 90	1
-42	H1004-0001-34	WASHER, wave, BW12	1
-43	M000-6209Z	BEARING, 6209Z	1
-44	123-3113-20	COLLAR	1
-45	127-0102-01-4	HOUSING	1
-46	C5010-120401	BOLT, socket-head, 12 x 40	4
-47	M000-6309ZZ	BEARING, 6309ZZ	1
-48	123-3113-19-1	COVER	1
-49	C5152-000450	WASHER, lock, 45	1
-50	C5132-000451	NUT, bearing, 45	1

INDEX NO.	PART NO.	DESCRIPTION	Q'TY
4-51	C5010-060161	BOLT, socket-head, 6 x 16	3

SHEET NO. 4 HEADSTOCK AND MAIN SPINDLE

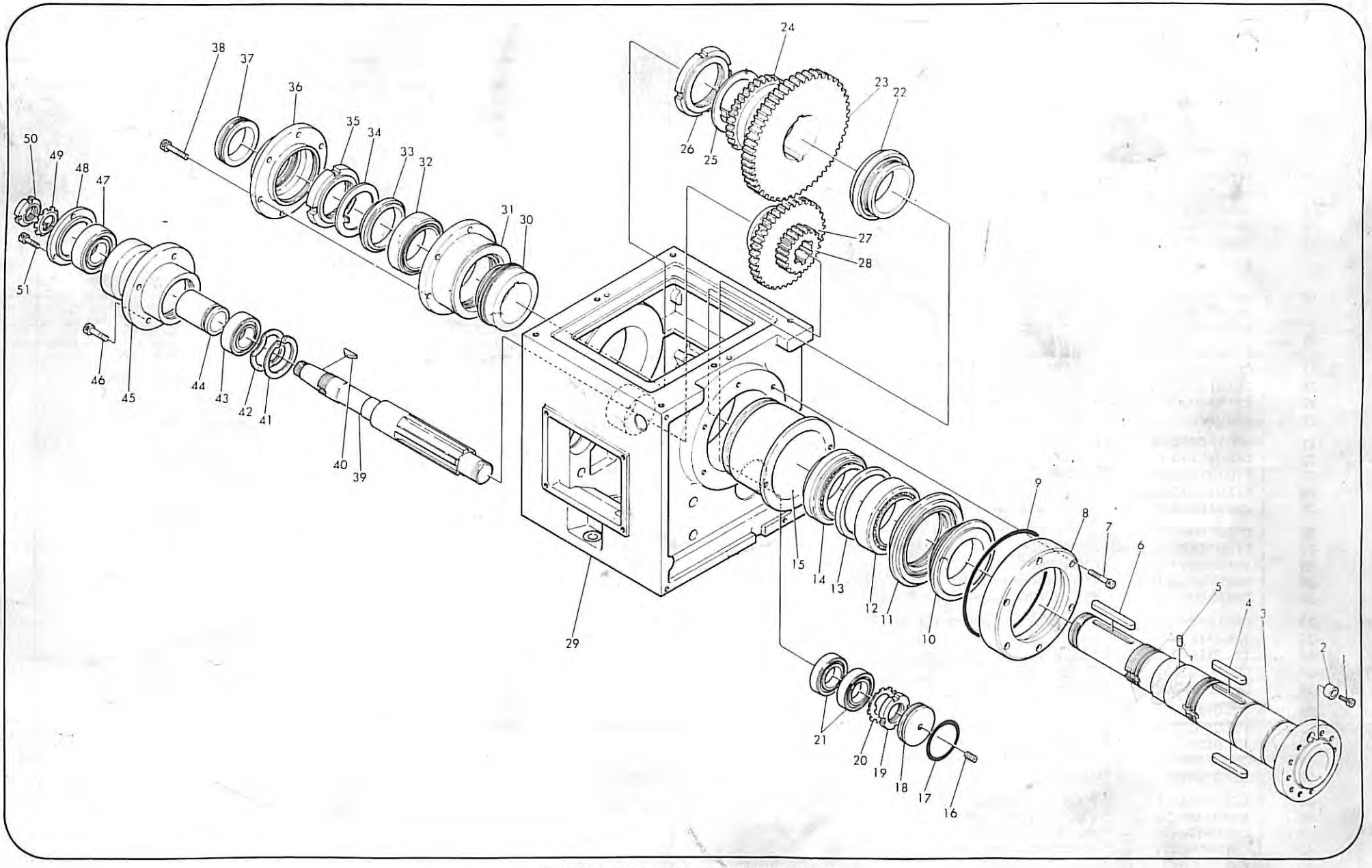

SHEET NO. 5 HEADSTOCK GEAR SHIFTER

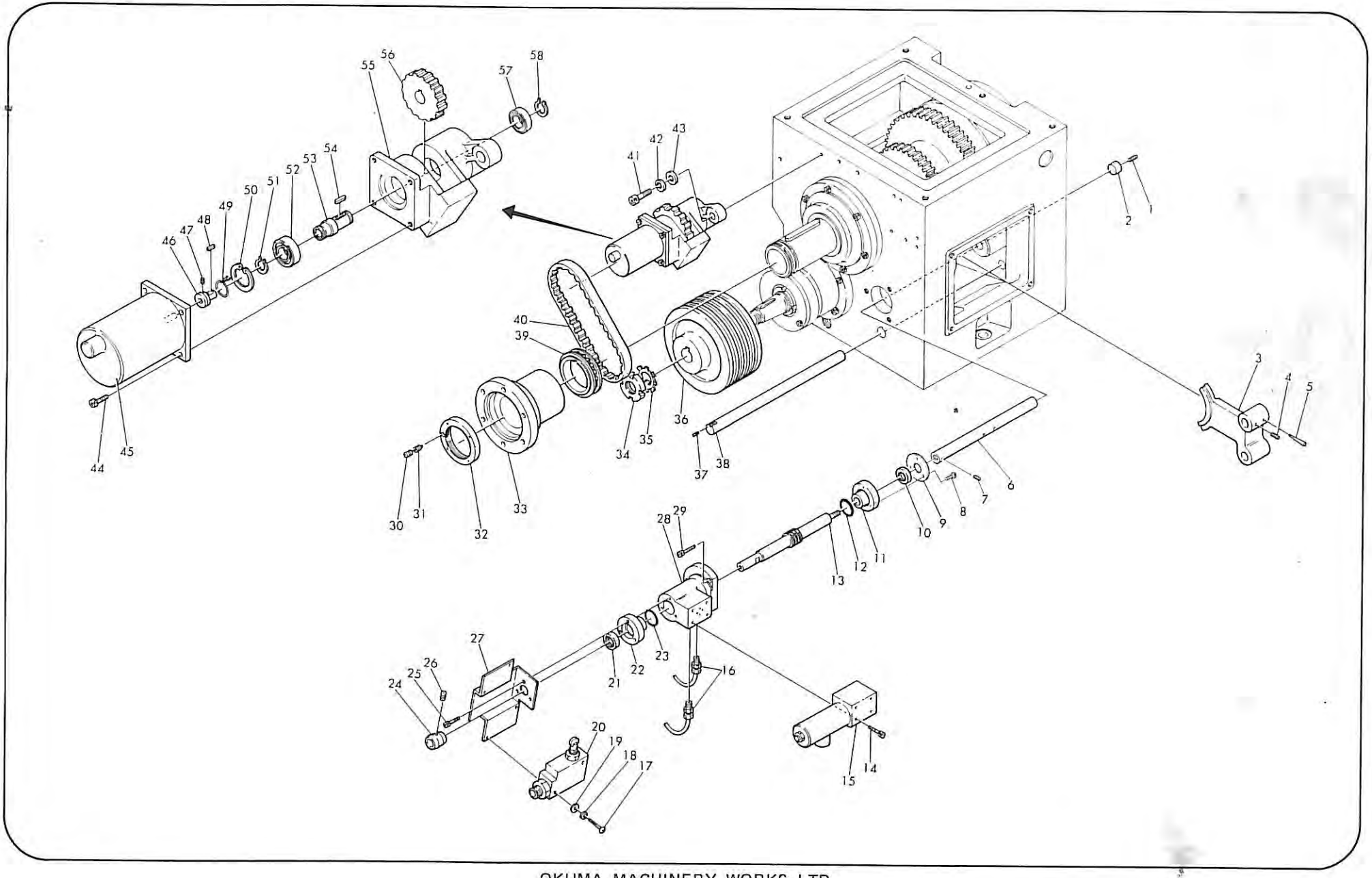

SHEET NO. 6 HEADSTOCK LUBRICATION

INDEX NO.	PART NO.	DESCRIPTION	Q'TY
6-1	C5040-005081	SCREW, pan-head, 5 x 8	1
-2	127-0100-06	CLAMP, pipe	1
-3	C2935-000250	WINDOW, oil, A25	1
-4	C5040-005081	SCREW, pan-head, 5 x 8	1
-5	127-0100-06	CLAMP, pipe	1
-6	D7780-206500	PIPE, copper, F, 5 x 650	1
-7	D7780-204000	PIPE, copper, F, 5 x 400	1
-8	D7780-208500	PIPE, copper, F, 5 x 850	1
-9	C7861-000032	PLUG, 1/2	1
-10	C7720-000222	NIPPLE, F, TS, 5TS	5
-11	C7770-000022	NUT, F pipe, 5	5
-12	D7780-202500	PIPE, copper, F, 5 x 250	1
-13	D7780-202500	PIPE, copper, F, 5 x 250	1
-14	127-0100-05-2	PIPE	1
-15	C5010-050161	BOLT, socket-head, 5 x 16	2
-16	C7812-000442	ELBOW, street, M, 3/4	1
-17	D7872-002542	JOINT, hose, for vinyl, 3/4 (25)	1
-18	D2765-000321	CLAMP, wire, 32, SUGITA VALVE, PK-1032	2
-19	C7791-250220	PIPE, SV, (inch), 1 x 225	1
-20	H0031-0161-07	PACKING, M13.5 x 19 x 1	1
-21	H0010-0000-17	ELBOW, street, NITTA BELT, LIN-3/8-PT1/4	1
-22	F1234-0480-0	TUBE, synflex, NITTA, N2-1-3/8 L480 70	1
-23	H0032-1161-03	UNIT, filter, SHOKETSU, 20 micron	1
-24	D7872-002542	JOINT, hose, for vinyl, 3/4 (25)	1
-25	H0010-0000-19	CONNECTOR, NITTA, CIN-3/8-PT1/4	1
-26	127-6110-04	BOSS	1
-27	127-6110-02-1	COVER	1
	9A-127-6110-02	COVER (IEC)	1
-28	D2781-000812	JOINT, pipe, A-8-PT1/4 NTN A-8-PT1/4 ISO	1
-29	D2781-020802	JOINT, pipe, B-8-PT1/8 NTN BL-8-PT1/8 ISO	1
-30	D7781-080180	PIPE, steel, 8 x 180	1
-31	D7781-080300	PIPE, steel, 8 x 300	1
-32	127-6110-05	TANK	1
-33	H0039-0000-42	GAUGE, oil, NK4, KOHO-03	1
-34	C7812-000222	ELBOW, street, M, 3/8	1
-35	C7850-000022	PLUG, M, 3/8	1
-36	C5010-060161	BOLT, socket-head, 6 x 16	4
-37	F1019-0001-22	PUMP, trochoid, NOP, TOP-IME75-2-10MA, 200V	1
	F0101-10-000-42	PUMP, trochoid (IEC), NOP TOP-IME75-2-10MA	1
-38	C5010-080161	BOLT, socket-head, 8 x 16	4
-39	D2781-020802	JOINT, pipe, B-8-PT1/8 NTN BL-8-PT1/8 ISO	1
-40	C5010-080181	BOLT, socket-head, 8 x 18	2
-41	C5150-000081	WASHER, plain, 8	2
-42	C5100-000101	NUT, hex., #3, 10	1
-43	C5000-100801	BOLT, 10 x 80	1

SHEET NO. 6 HEADSTOCK LUBRICATION

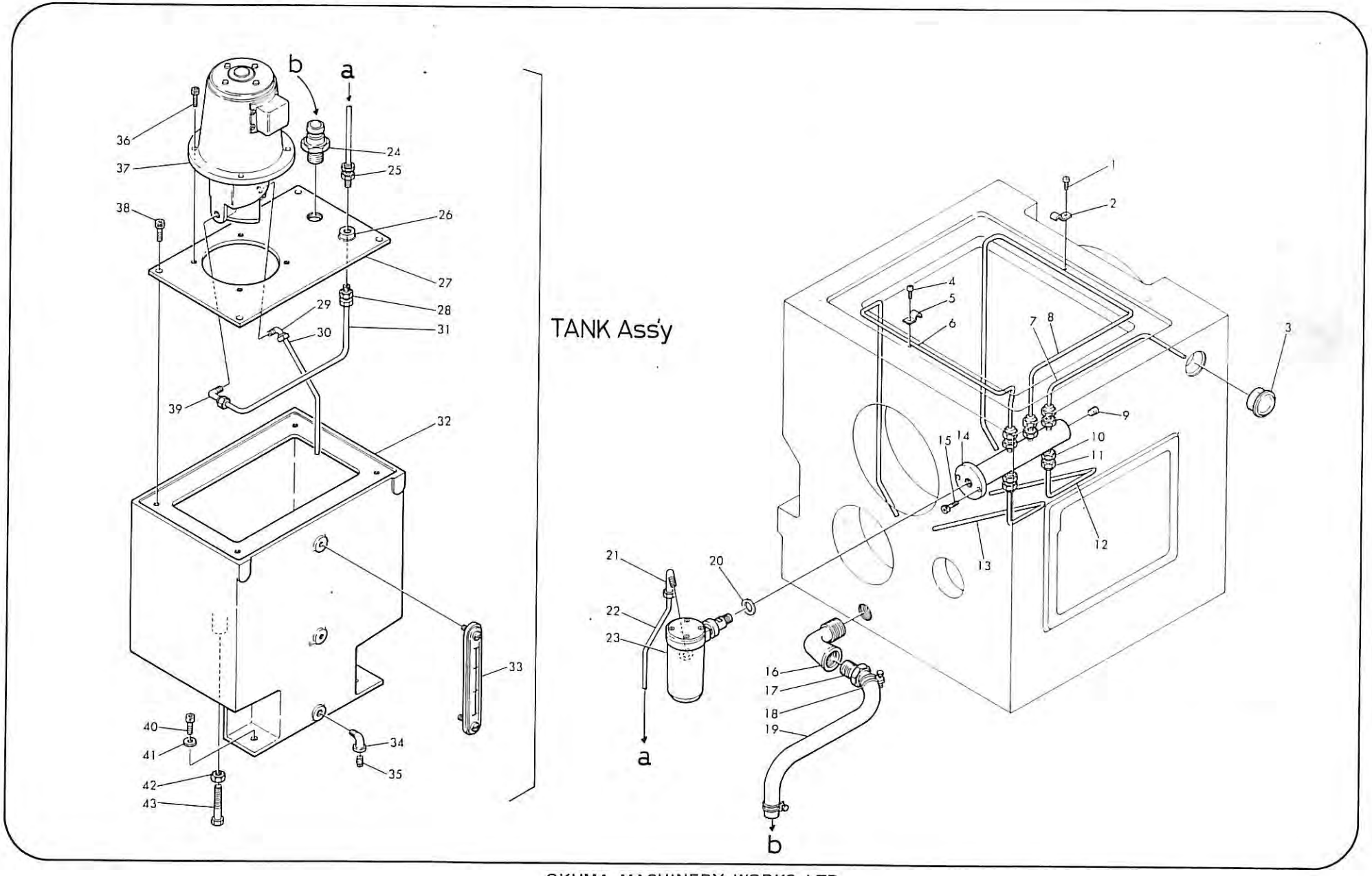

SHEET NO. 8 "HOS" HYDRAULIC HOLLOW CHUCK AND "YOSR" CYLINDER

INDEX NO.	PART NO.	DESCRIPTION	Q'TY
8-1		BOLT, accessory for chuck	3
-2	T009-200-000-97	CHUCK, hydraulic, HOS-8-1	1
-3	127-6120-04-1	PIPE	1
-4	C5010-120351	BOLT, socket-head, 12 x 35	6
-5	C5140-000081	WASHER, polished, 8	2
-6	C5010-080201	BOLT, socket-head, 8 x 20	2
-7	127-6120-16	SUPPORT	1
-8	C5010-100201	BOLT, socket-head, 10 x 20	6
-9	127-6120-03	FLANGE	1
-10	H0001-0001-12	CYLINDER, rotary, KITAGAWA, YOSR I5T 201	1
-11	H0010-0003-89	JOINT, L2N-1/2-PT3/8	1
-12	H0010-0003-89	JOINT, L2N-1/2-PT3/8	1
-13	D7792-250750	HOSE, vinyl, with spring, 25 x 750	1
-14	D2765-000351	CLAMP, wire, 35, SUGITA, AK-1035	2
-15	D7872-002542	JOINT, hose, for vinyl, 3/4 (25)	2
-16	C7812-000442	ELBOW, street, M, 3/4	1
-17	C5132-000501	NUT, bearing, 50	1
-18	C5181-000900	SNAP RING, internal, 90	1
-19	C5180-000550	SNAP RING, 55	1
-20	M000-6011ZZ	BEARING, 6011ZZ	1
-21	127-6120-18	SHAFT	1
-22	127-6120-19	HOUSING	1
-23	127-6120-17	COVER	1
-24	C5010-060141	BOLT, socket-head	2
-25	C5110-000051	NUT, hex., #4, 5	4
-26	C5140-000051	WASHER, polished, 5	4
-27	C5010-050121	BOLT, socket-head, 5 x 12	2
-28	C5160-000051	WASHER, spring, 5	2
-29	127-6120-20	SUPPORT	1
-30	127-6120-10	DOG	2
-31	D5010-050651	BOLT, socket-head, 5 x 65	2
-32	E3010-397-123	LIMIT-SWITCH, TATEISHI, ZV2-N22-2	1
-33	E3010-397-123	LIMIT-SWITCH, TATEISHI, ZV2-N22-2	1
-34	C5140-000051	WASHER, polished, 5	2
-35	C5160-000051	WASHER, spring, 5	2
-36	C5110-000051	NUT, hex., #4, 5	2
-37	C7812-000442	ELBOW, street, M, 3/4	1
-38	D7872-002542	JOINT, hose, for vinyl, 3/4 (25)	1
-39	D2765-000351	CLAMP, wire, 35, SUGITA, AK-1035	1
-40	D7792-251050	HOSE, vinyl, with spring, 25 x 1050	1

SHEET NO. 8 "HOS" HYDRAULIC HOLLOW CHUCK AND "YOSR" CYLINDER

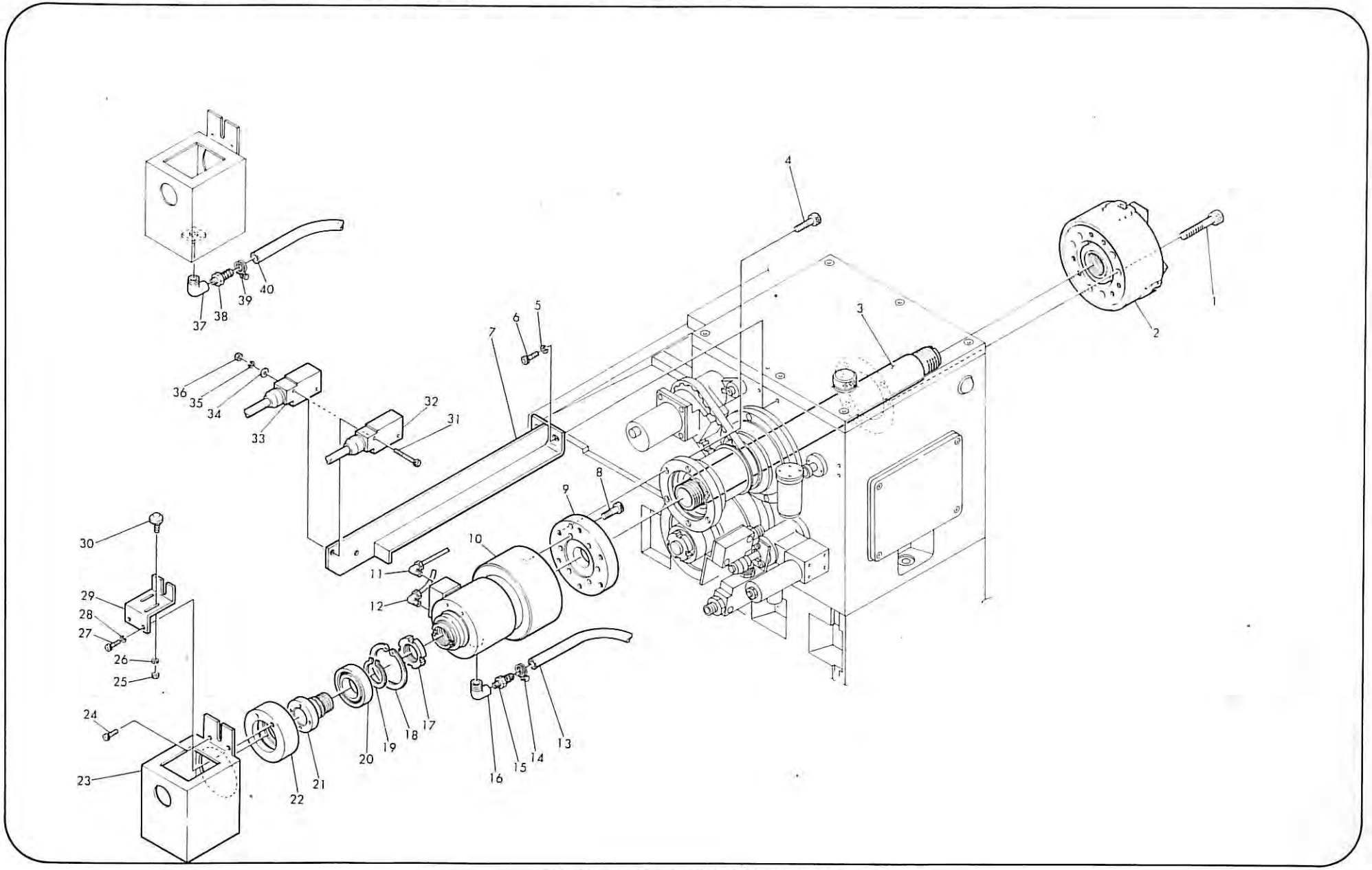

SHEET NO. 9 UPPER CROSS-SLIDE AND X-AXIS BALL-SCREW

INDEX NO.	PART NO.	DESCRIPTION	Q'TY
9-1	127-0311-04-2	GIB	1
-2	127-0311-02-1	PLATE, back	1
-3	101-0300-14	NUT	1
-4	101-0300-13	SCREW	1
-5	C5040-005201	SCREW, pan-head, 5 x 20	6
-6	127-0311-06-2	COVER	1
-7	H1023-0002-66	WIPER	1
-8	H1032-1004-07-1	WIPER	1
-9	127-0311-07-1	PLATE	1
-10	108-0301-18-1	NUT, holder	1
-11	108-0301-17	BOLT	1
-12	127-0311-05-2	GIB	1
-13	C5010-120551	BOLT, socket-head, 12 x 55	4
-14	127-0311-01-1	CROSS-SLIDE, 1S	1
-15	C5010-120551	BOLT, socket-head, 12 x 55	4
-16	C5010-100301	BOLT, socket-head, 10 x 30	4
-17	H1020-1028-93-2	WIPER, anti-oil rubber	1
-18	127-0311-08-1	PLATE	1
-19	C5040-105141	SCREW, pan-head, 5 x 14	3
-20	H1014-0000-85	BALL-SCREW, 28TTJS6-659HG5	1
-21	C5030-005061	SET-SCREW, flat-point, 5 x 6	2
-22	122-0310-17	PIN, straight	2
-23	H1020-1028-91-1	WIPER, anti-oil rubber	1
-24	127-0311-09-1	PLATE	1
-25	C5040-005141	SCREW, pan-head, 5 x 14	3
-26	127-0211-04	STOPPER	1
-27	C5010-080301	BOLT, socket-head, 8 x 30	2
-28	H1030-1000-60	STOPPER	1
-29	5040-005101	SCREW, pan-head, 5 x 10	2
-30	C5040-005081	SCREW, pan-head, 5 x 8	2
-31	127-0211-03	COVER	1
-32	C5010-050201	BOLT, socket-head, 5 x 20	4
-33	C0201-060251	ITP, 6 x 25	2
-34	127-0211-02-1	BUSH	1
-35	C5180-000150	SNAP-RING, external, 15	1
-36	M000-6202LLBP5	BEARING, 6202LLBP5	1
-37	C5050-005101	SCREW, pan-head, 5 x 10	2
-38	H1030-1000-61	STOPPER	1
-39	127-0211-01-1	HOUSING	1
-40	C5010-080161	BOLT, socket-head, 8 x 16	3
-41	117-0200-08	COLLAR	2
-42	M009-0006-61	BEARING, NSK, 20TAC47DBG pre-load 200 K	1
-43	174-0210-01-1	COLLAR	1
-44	127-0211-10-1	COVER	1
-45	C6100-000350	RING, felt, 35	1
-46	C5153-000200	WASHER, lock, 20	1
-47	C5131-000201	NUT, round, 20	1
-48	C0201-060281	ITP, 6 x 38	2
-49	C5010-080301	BOLT, socket-head, 8 x 30	4
-50	101-0300-14	NUT	1

INDEX NO.	PART NO.	DESCRIPTION	Q'TY
9-51	101-0300-13	SCREW	1
-52	127-0311-04-1	GIB	1
-53	127-0311-03-1	PLATE, back	1
-54	H0012-0003-89	DISTRIBUTOR, SHOWA DA-8	1
-55	H0010-0012-38	UNIT, flow, SHOWA PSS-3	1
-56	H000-0000-88	JOINT, SHOWA PAN-4	7
-57	H0035-0000-57	BAND, pipe, SHOWA PZ14	1
-58	C5040-005081	SCREW, pan-head, 5 x 8	1
-59	D7781-041000	PIPE, steel, 4 x 1000	1
-60	H0012-0000-89	JOINT, SHOWA PB-4	14
-61	H0010-0004-34	JOINT, SHOWA PST-4	6
-62	H0012-0003-90	ELBOW, PI-1	6
-63	H0022-0001-94	HOSE, flexible	1

WE DO HAVE THIS ONE

SHEET NO. 9 UPPER CROSS-SLIDE AND X-AXIS BALL-SCREW

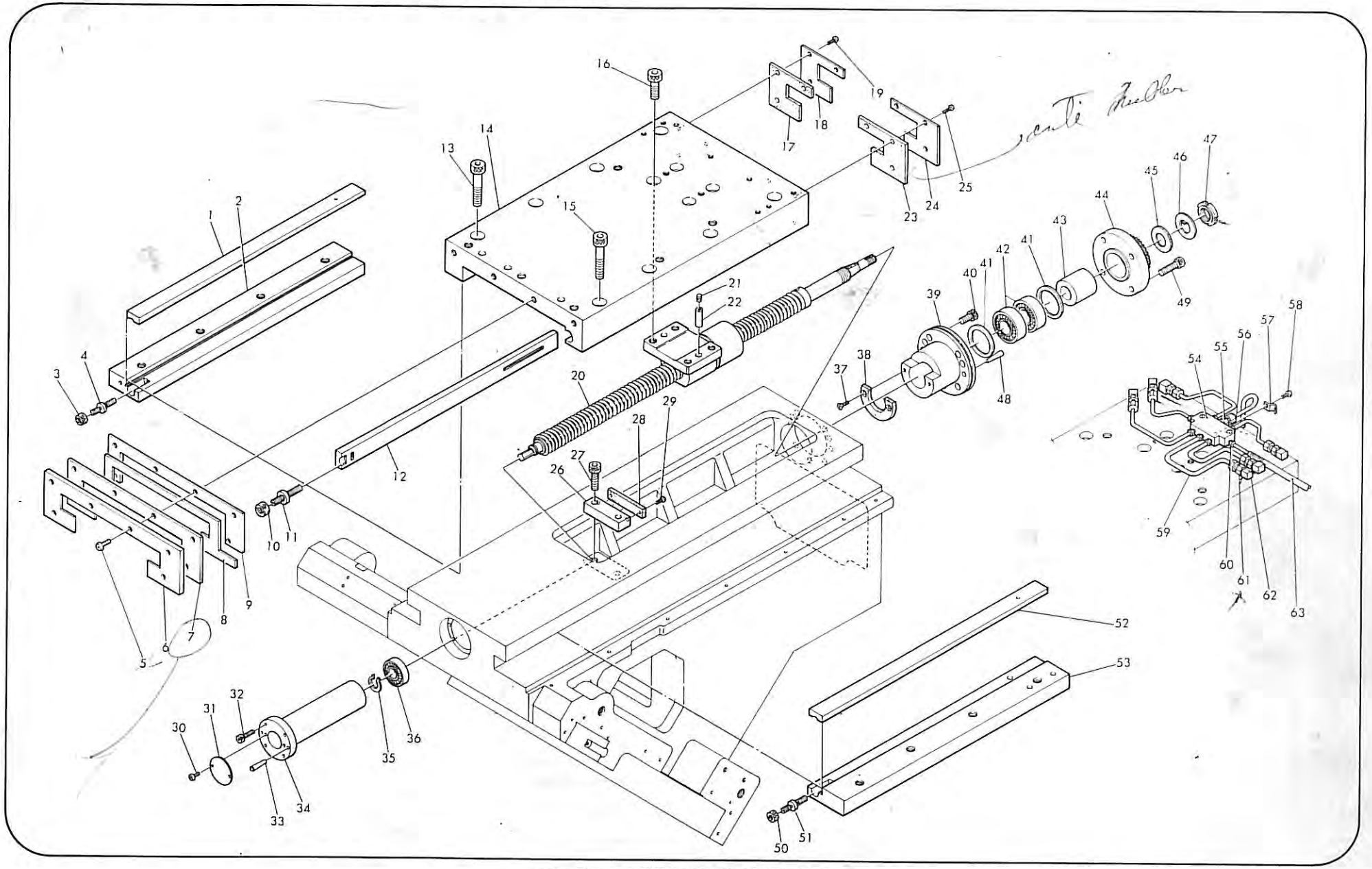

SHEET NO. 10 UPPER X-AXIS DRIVE UNIT

INDEX NO.	PART NO.	DESCRIPTION	Q'TY
10-1	C5010-050401	BOLT, socket-head, 5 x 40	2
-2	E3012-891-001	LIMIT-SWITCH, YAMATAKE, 1 LS1-J	1
-3	C5171-005160	KEY, woodruff, 5 x 16	1
-4	127-0211-05-1	BOX	1
-5	M101-12070-02010	SPRING, compression, setting, 1.2 x 7.0 x 20 x 10	16
-6	C5050-004081	SCREW, 4 x 8	6
-7	137-0210-03	PULLEY	1
-8	M1132-10300G	BELT, synchro, BANDO, 300H-100G	1
-9	C5010-120401	BOLT, socket-head, 12 x 40	2
-10	127-0211-07-1	COVER	1
-11	C5010-120301	BOLT, socket-head, 12 x 30	4
-12	174-0210-06-1	HOLDER, magnet	1
-13	C5010-040201	BOLT, socket-head, 4 x 20	6
-14	E2552-292-003	COIL, for brake, E180044, SANYO	1
-15	147-0210-07	SERRATION	1
-16	147-0210-26	LINING, brake	1
-17	M000-6001LLB	BEARING, 6001LLB	1
-18	122-7301-07	COLLAR	1
-19	C5153-000120	WASHER, lock, 12	1
-20	C5131-000121	NUT, round, 12	1
-21	127-0211-08-1	COVER	1
-22	C5040-005081	SCREW, pan-head, 5 x 8	2
-23	121-7210-17-1	NUT, round	1
-24	121-7303-12	WASHER	1
-25	147-0210-15-2	PULLEY	1
-26	M000-6011LLB	BEARING, 6011LLB	1
-27	C5180-000550	SNAP-RING, external, 55	1
-28	127-0211-06-1	BASE, motor	1
-29	E1226-288-010	DC MOTOR	1
-30	C5150-000121	WASHER, plain, 12	4
-31	C5160-000121	WASHER, spring, 12	4
-32	C5010-120551	BOLT, socket-head, 12 x 55	4
-33	C5160-000121	WASHER, spring, 12	4
-34	C5010-120351	BOLT, socket-head, 12 x 35	4
-35	912-6510-144	GEAR BOX	1
-36	C5010-050451	BOLT, socket-head, 5 x 45	4
-37	E5574-295-017	COVER	1
-38	C5010-040121	BOLT, socket-head	2
-39	912-1090-01-1	COLLAR, eccentric	1
-40	912-5040-19	GEAR	1
-41		NUT, accessory for No. 26	1
-42	H1005-0000-97	NUT	1
-43	912-5040-18-1	GEAR	1
-44	912-1600-04-2	PLATE	1
-45	1911-0172	OSP POSITION ENCODER	1
-46	C5010-050141	BOLT, socket-head, 5 x 14	3
-47	912-8270-03-2	COVER	1
-48	C5040-005101	BOLT, socket-head, 5 x 10	2

SHEET NO. 10 UPPER X-AXIS DRIVE UNIT

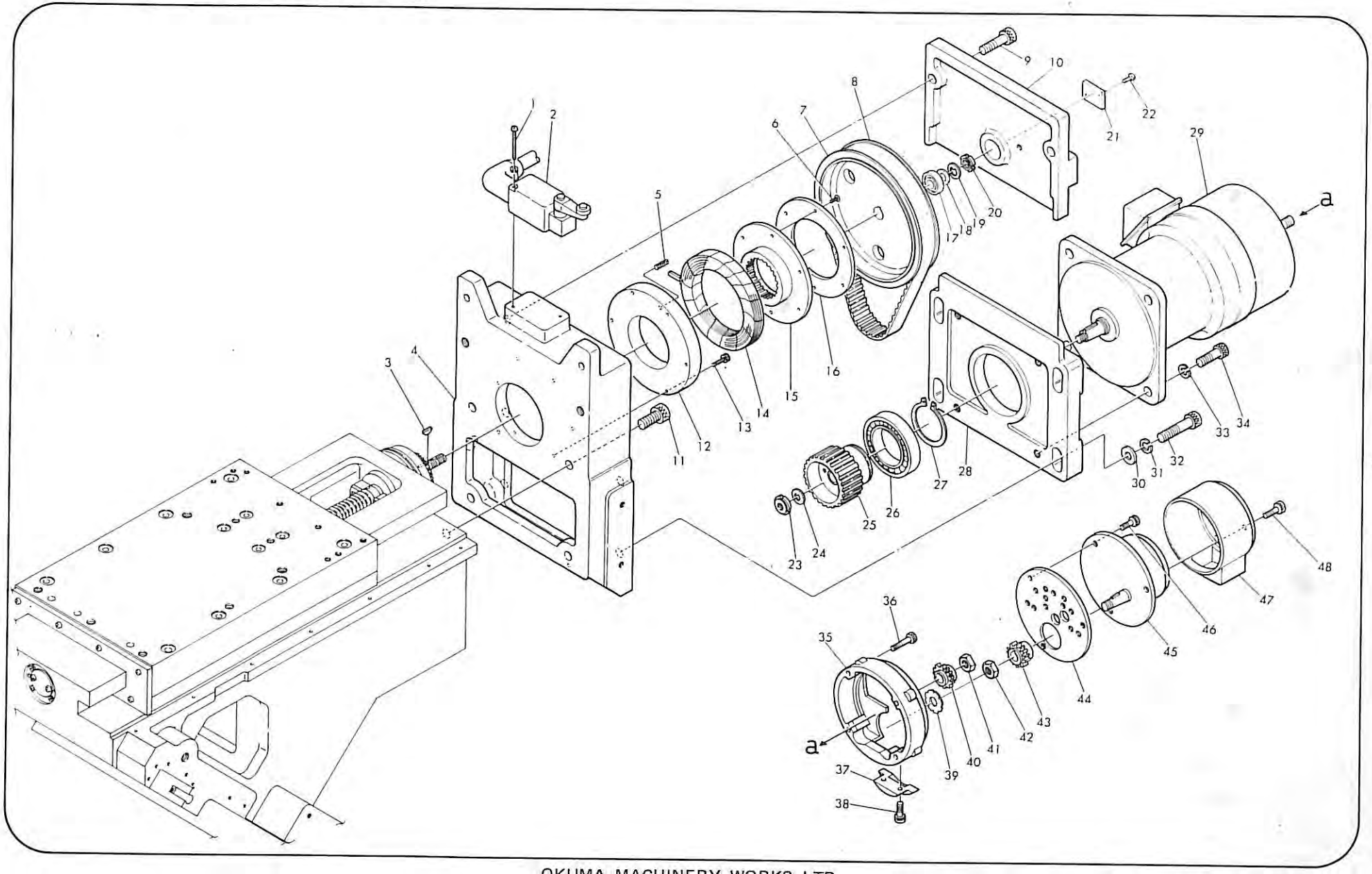

OKUMA MACHINERY WORKS LTD.

SHEET NO. 11 LOWER CROSS-SLIDE AND X-AXIS BALL-SCREW, – 2ST –

INDEX NO.	PART NO.	DESCRIPTION	Q'TY
11-1	127-0312-02-1	PLATE, back	1
-2	127-0312-18-1	GIB	1
-3	101-0300-13	SCREW	1
-4	101-0300-14	NUT	1
-5	C5010-050141	BOLT, socket-head, 5 x 14	3
-6	127-0312-16	PLATE	1
-7	H1020-1029-83	WIPER, NISHIZAWA, anti-oil rubber	1
-8	C5010-120551	BOLT, socket-head, 12 x 55	4
-9	127-0312-01-1	CROSS-SLIDE	1
-10	C5010-100221	BOLT, socket-head, 10 x 22	4
-11	C5010-050141	BOLT, socket-head, 5 x 14	3
-12	127-0312-17	PLATE, NISHIZAWA, anti-oil rubber	1
-13	H1020-1029-84	WIPER	1
-14	127-0312-06	JOINT	1
-15	C5030-005061	SET-SCREW, flat-point, 5 x 6	2
-16	122-0301-17	PIN, straight	2
-17	H1014-0001-79	BALL-SCREW	1
-18	127-0212-16	STOPPER	1
-19	C5030-005121	SET-SCREW, flat-point, 5 x 12	1
-20	C5010-120551	BOLT, socket-head, 12 x 55	4
-21	127-0312-04	GIB	1
-22	108-0301-17	BOLT	1
-23	108-0301-18-1	NUT	1
-24	H1032-1004-11	WIPER	1
-25	127-0312-15-1	PLATE	1
-26	H1023-0002-63	WIPER	2
-27	127-0312-14-1	COVER	1
-28	127-0312-12-1	WIPER	2
-29	127-0312-13-1	WIPER	2
-30	127-0312-11-1	WIPER	2
-31	C5040-005201	SCREW, pan-head, 5 x 20	10
-32	C5131-000201	NUT, round, 20	1
-33	C5153-000200	WASHER, lock, 20	1
-34	C6100-000350	RING, felt, 35	1
-35	127-0212-02-1	COVER	1
-36	C5010-080301	BOLT, socket-head, 8 x 30	4
-37	127-0212-04	COLLAR	1
-38	117-0200-08	COLLAR	2
-39	M009-0006-61	BEARING, 20TAC47DBG NSK 200K pre-load	1
-40	127-0212-03-1	COLLAR	1
-41	F1100-030-04007	OIL SEAL, SB30407	1
-42	C5010-080161	BOLT, socket-head, 8 x 16	3
-43	C0201-060281	ITP, 6 x 28	2
-44	127-0212-01-1	HOUSING	1
-45	H1030-1001-65	STOPPER, leather, M36 x M58 x 5	1
-46	C5050-005081	SCREW, flat-head, 5 x 8	2
-47	C5040-005101	SCREW, pan-head, 5 x 10	2
-48	H1030-1000-60	STOPPER, leather	1
-49	127-0211-04	STOPPER	1
-50	C5010-080301	BOLT, socket-head, 8 x 30	2

INDEX NO.	PART NO.	DESCRIPTION	Q'TY
11-51	127-0312-04-2	GIB	1
-52	127-0312-03-1	PLATE, back	1
-53	101-0300-13	SCREW	1
-54	101-0300-14	NUT	1
-55	C5040-005401	SCREW, pan-head, 5 x 40	2
-56	H0012-0000-69	DISTRIBUTOR, SHOWA, DB-6	2
-57	H0012-0901-45	PLUG, seal, SHOWA, PG-8	2
-58	H0010-0004-41	UNIT, flow, SHOWA, PSS-4	6
	H0010-0012-38	UNIT, flow, SHOWA, PSS-3	1
-59	H0010-0007-96	NUT, SHOWA, PAN-4	7
	H0010-0300-27	SLEEVE, SHOWA, PB-4	7
-60	127-0312-07-1	SUPPORT	1
-61	C5010-050141	BOLT, socket-head, 5 x 14	2
-62	H0010-0300-26	PLUG, SHOWA, PA-4	9
	H0010-0300-27	SLEEVE, SHOWA, PB-4	9

SHEET NO. 11 LOWER CROSS-SLIDE AND X-AXIS BALL-SCREW, – 2ST –

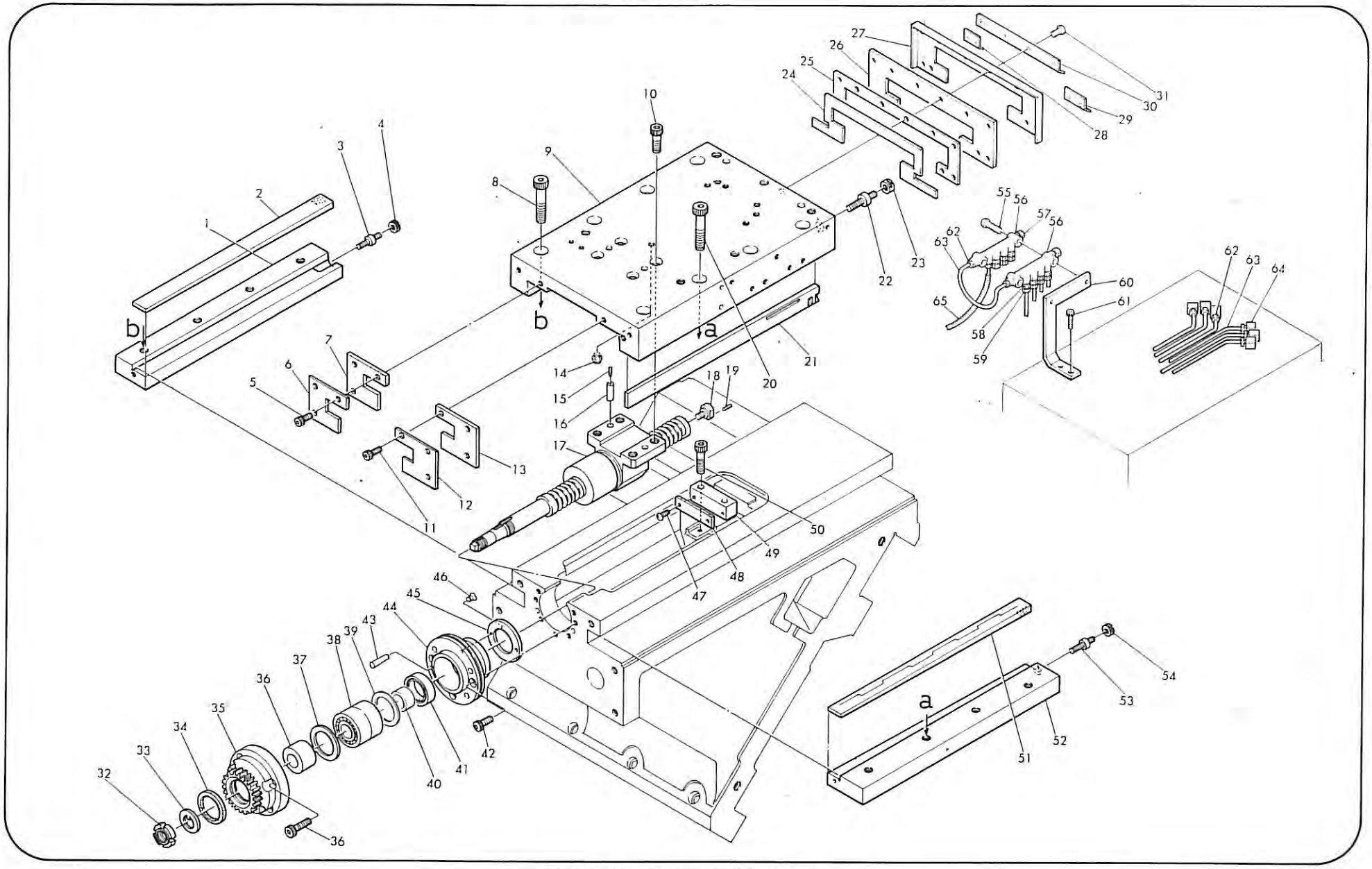

OKUMA MACHINERY WORKS LTD.

SHEET NO. 12 LOWER SADDLE AND X-AXIS DRIVE UNIT, – 2ST –

INDEX NO.	PART NO.	DESCRIPTION	Q'TY
12-1	C5040-005101	SCREW, pan-head, 5 x 10	3
-2	127-0212-10	COVER	1
-3	H1020-1029-89	PACKING	1
-4	127-0212-08-1	COVER	1
-5	127-0212-09	COVER	1
-6	C5040-005101	SCREW, pan-head, 5 x 10	4
-7	C5010-080201	BOLT, socket-head, 8 x 20	6
-8	C5131-000121	NUT, round, 12	1
-9	C5153-000120	WASHER, lock, 12	1
-10	122-7301-07	COLLAR	1
-11	M000-6201LLBP5	BEARING, 6201LLBP5	1
-12	127-0212-05-2	PULLEY	1
-13	M1132-103909	BELT, synchro, BANDO, 390H100G	1
-14	C5050-004081	SCREW, 4 x 8	6
-15	147-0210-26	LINING, brake	1
-16	127-0212-15	SERRATION	1
-17	E2552-292-003	COIL, for brake, E180044, SANYO	1
-18	M101-12070-02010	SPRING, compression, setting, 1.2 x 7.0 x 20 x 10	16
-19	C5010-120301	BOLT, socket-head, 12 x 30	2
-20	174-0210-06-1	HOLDER, magnet	1
-21	127-0212-07-1	GEAR BOX	1
-22	C5171-005160	KEY, woodruff, 5 x 16	1
-23	127-0312-09-1	DOG	1
-24	C5140-000051	WASHER, polished, 5	2
-25	C5010-050141	BOLT, socket-head, 5 x 14	2
-26	E3001-891-007	MICRO-SWITCH, 14CE2-1, lead pipe 2m	1
-27	C5010-050201	BOLT, socket-head, 5 x 20	2
-28	C5040-005081	SCREW, pan-head, 5 x 8	5
-29	127-0302-09	COVER	1
-30	C5010-050101	BOLT, socket-head, 5 x 10	3
-31	127-0312-08	COVER	1
-32	127-0312-10	DOG	1
-33	C5140-000051	WASHER, polished, 5	2
-34	C5010-050141	BOLT, socket-head, 5 x 14	2
-35	121-7210-17-1	NUT, round	1
-36	121-7303-12	WASHER	1
-37	127-0212-12-1	PULLEY, BANDO, 18H100A	1
-38	C5010-120301	BOLT, socket-head, 12 x 30	4
-39	C5010-040201	BOLT, socket-head, 4 x 20	6
-40	C5010-120801	BOLT, socket-head, 12 x 80	4
-41	C5150-000121	WASHER, plain, 12	4
-42	127-0212-13-2	PLATE	1
-43	C5010-080161	BOLT, socket-head, 8 x 16	2
-44	C5010-080351	BOLT, socket-head, 8 x 35	1
-45	F100-200-14950	O-RING, NOK, S150	1
-46	M000-6009LLB	BEARING, 6009LLB	1
-47	C5180-000450	SNAP-RING, external, 45	1
-48	127-0212-11-1	BASE, motor	1
-49	E1226-288-010	DC MOTOR	1
-50	C5140-000121	WASHER, polished, 12	4
12-51	C5010-120301	BOLT, socket-head, 12 x 30	4
-52	E5574-295-017	COVER	1
-53	C5010-040121	BOLT, socket-head, 4 x 12	2
-54	912-6510-144	GEAR BOX	1
-55	C5010-050451	BOLT, socket-head, 5 x 45	4
-56	912-1090-01-1	COLLAR, eccentric	1
-57	912-5040-15	GEAR	1
-58	H1005-0000-97	NUT	1
-59	912-5040-14-1	GEAR	1
-60	912-1600-04-2	PLATE	1
-61	1911-0172	OSP POSITION ENCODER	1
-62	C5010-050141	BOLT, socket-head, 5 x 14	3
-63	C5040-005101	BOLT, socket-head, 5 x 10	2
-64	912-8270-03-2	COVER	1

SHEET NO. 12 LOWER SADDLE AND X-AXIS DRIVE UNIT, – 2ST –

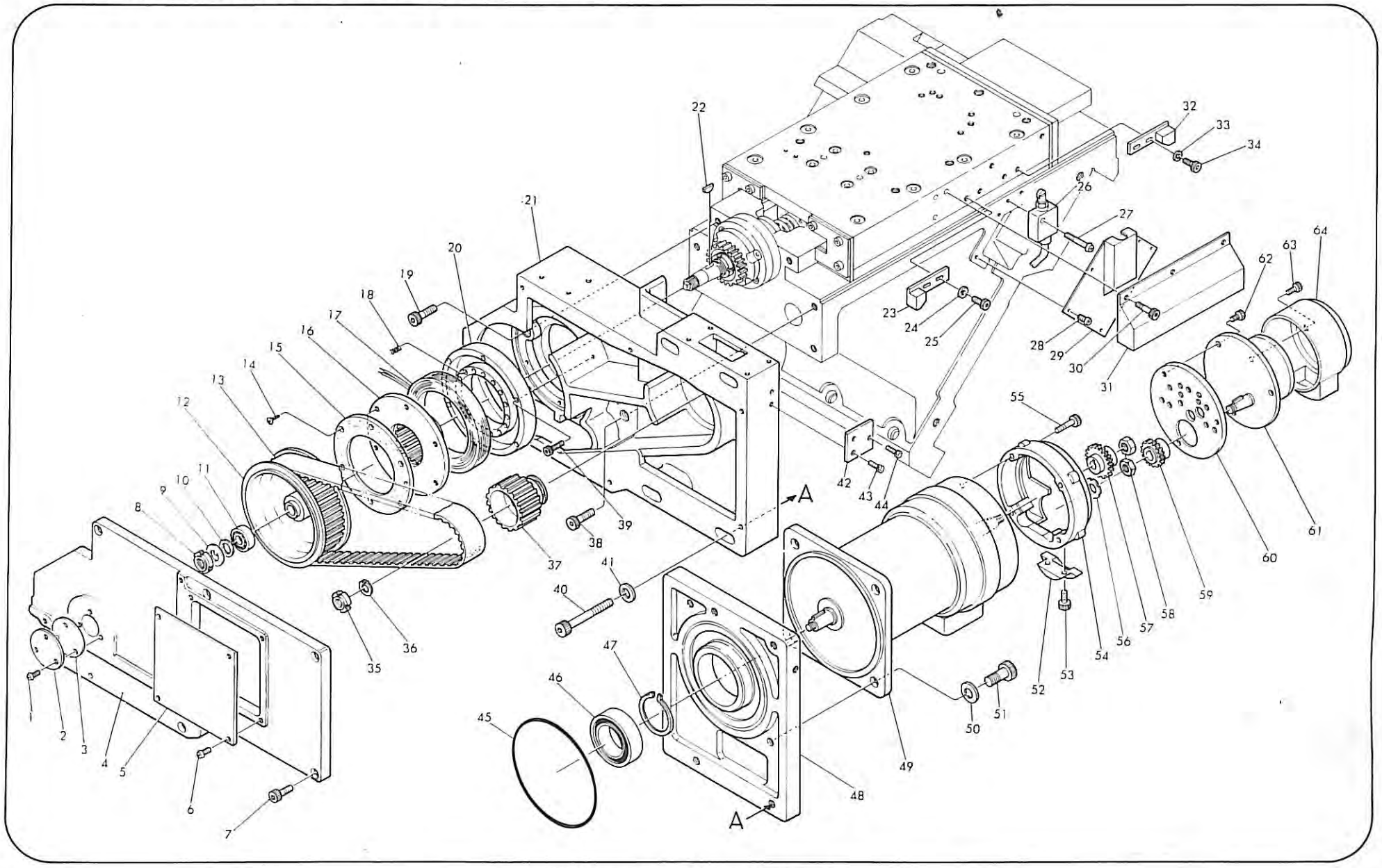

OKUMA MACHINERY WORKS LTD.

-AXIS BALL-SCREW, – 1ST –

N	Q'TY
ead, 5 x 8	4
) Slide seal, type-SS #0	1
) Slide seal, type-SS #0	1
ıead, 12 x 60	4
ıead, 12 x 55	4
ad, 5 x 8	6
Slide seal, type-SS #0	1
Slide seal, type-SS #0	1
Slide seal, type-SS #0	1
	1
d, 5 x 8	1
ad, 12 x 40	4
	4
	2
ad, 12 x 35	1
	1
ad, 5	1
d, 5 x 20	2
	2
, 5 x 10	1
	1
d, 12 x 40	1
	2
l, 5 x 20	1
l, 5	2
	2
	1
, 12 x 40	2
	4
043, NIPPON BELLOWS	1
	1
	1
	1
	4
8 x 16	1
	3
	1
	1
	1
MATAKE, L61-J	1
x 35	1
x 16	2
	2
	1
seal, type-SS #0	1
seal, type-SS #0	1
seal, type-SS #0	1
8	1
	6

INDEX NO.	PART NO.	DESCRIPTION	Q'TY
13-51	H1023-1014-41-1	WIPER	1
-52	H1023-1014-42-1	WIPER	1
-53	C5040-005081	SCREW, pan-head, 5 x 8	4
-54	C5040-005081	SCREW, pan-head, 5 x 8	2
-55	127-0200-08-1	BRACKET	1
-56	M000-6206LLBP5	BEARING, 6206LLBP5	1
-57	D5480-030150	COLLAR, distance, inner, 30 x 40 x 15	1
-58	M000-6206LLBP5	BEARING, 6206LLBP5	1
-59	D5420-304350	COLLAR, holding, bearing, 30 x 43 x 5	1
-60	C5153-000300	WASHER, lock, 30	1
-61	C5131-000301	NUT, round, 30	1
-62	127-0301-05-1	BRACKET	1
-63	C5040-005081	SCREW, pan-head, 5 x 8	1
-64	C5010-080201	BOLT, socket-head, 8 x 20	2
-65	C5010-080351	BOLT, socket-head, 8 x 35	6
-66	127-0200-06	COVER	4
-67	C5131-000301	NUT, round, 30	1
-68	C5153-000300	WASHER, lock, 30	1
-69	127-0200-05	COLLAR	1
-70	127-0200-04	COLLAR	1
-71	M009-0006-62	BEARING, 30TAC62DB	1
-72	127-0200-03-1	COLLAR	1
-73	127-0200-02	COLLAR	1
-74	127-0201-04-1	BRACKET	1
-75	H1032-0002-01	FELT	1
-76	H1030-1001-58	STOPPER	1
-77	C5040-005101	SCREW, pan-head, 5 x 10	2

WE DO HAVE THIS ONE

SHEET NO. 13 UPPER SADDLE AND Z-AXIS BALL-SCREW, – 1ST –

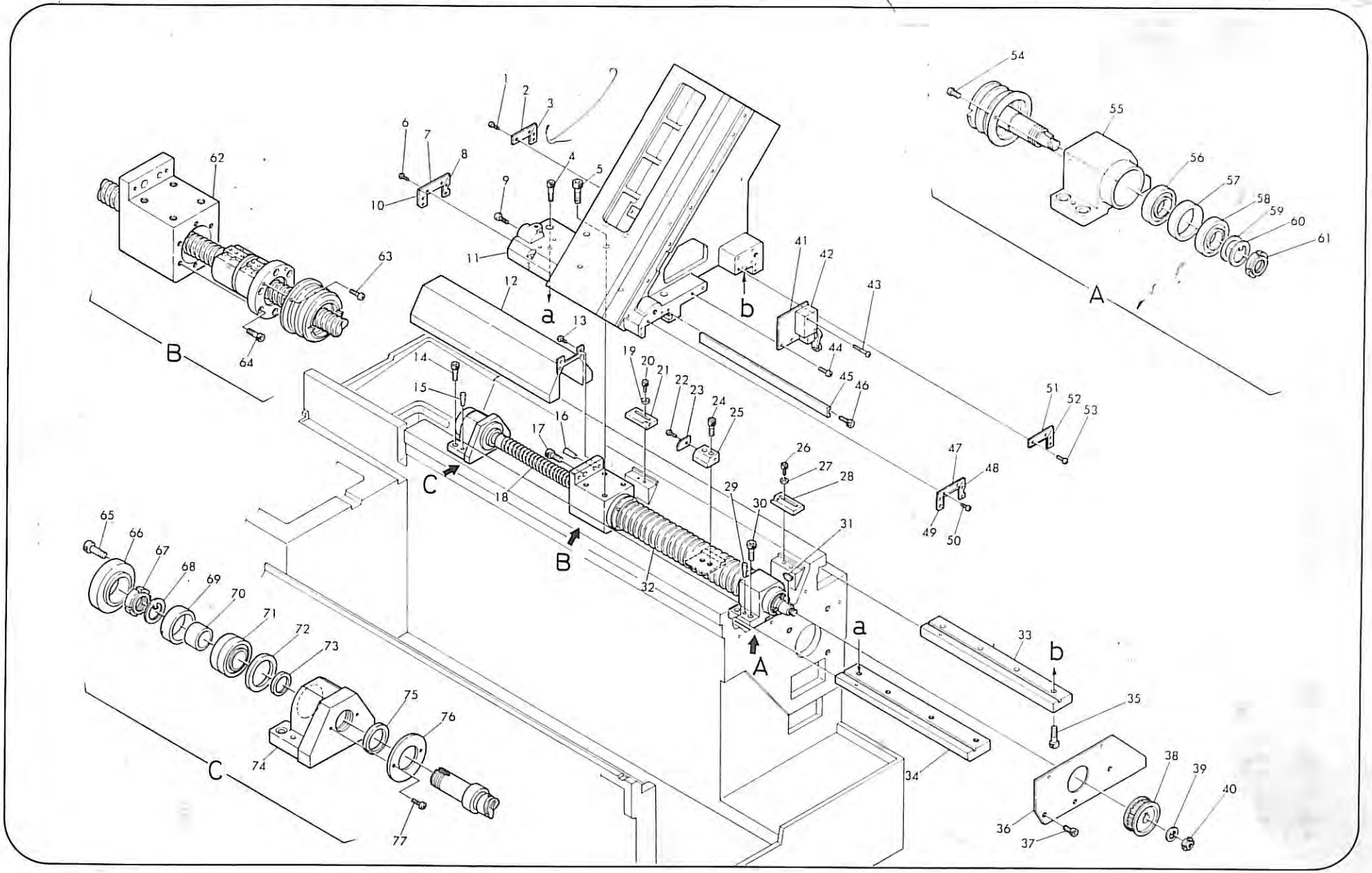

SHEET NO. 14 UPPER SADDLE AND Z-AXIS BALL-SCREW, – 2ST –

INDEX NO.	PART NO.	DESCRIPTION	Q'TY
14-1	C5040-005081	SCREW, pan-head, 5 x 8	4
-2	H1023-1014-44-1	WIPER, NITTA Slide seal type-SS #0	1
-3	H1023-1014-45-1	WIPER, NITTA Slide seal type-SS #0	1
-4	C5010-120601	BOLT, socket-head, 12 x 60	4
-5	C5010-120551	BOLT, socket-head, 12 x 55	4
-6	C5040-005081	SCREW, pan-head, 5 x 8	6
-7	H1023-1014-48-1	WIPER, NITTA Slide seal type-SS #0	1
-8	H1023-1014-94	WIPER, NITTA Slide seal type-SS #0	1
-9	C5029-000081	BOLT, gib	1
-10	H1023-1014-52-1	WIPER, NITTA Slide seal type-SS #0	1
-11	127-0301-01-1	SADDLE	1
-12	127-0201-03-1	COVER	1
-13	C5040-005081	SCREW, pan-head, 5 x 8	4
-14	C5010-120401	BOLT, socket-head, 12 x 40	4
-15	C0201-080401	ITP, 8 x 40	2
-16	C0201-080361	ITP, 8 x 36	1
-17	C5010-120351	BOLT, socket-head, 12 x 35	1
-18	H1014-1161-11-2	BALL-SCREW	1
-19	C5140-000051	WASHER, polished, 5	2
-20	C5010-050201	BOLT, socket-head, 5 x 20	2
-21	147-0300-13	DOG	1
-22	C5040-005101	SCREW, pan-head, 5 x 10	1
-23	H1030-1001-59	STOPPER	1
-24	C5010-120401	BOLT, socket-head, 12 x 40	2
-25	127-0200-07-2	DOG	1
-26	C5010-050201	BOLT, socket-head, 5 x 20	2
-27	C5140-000051	WASHER, polished, 5	2
-28	147-0300-12	DOG	1
-29	C0201-080401	ITP, 8 x 40	2
-30	C5010-120401	BOLT, socket-head, 12 x 40	4
-31		KEY, woodruff	1
-32	H1024-0000-47	BELLOWS, J-N534043, NIPPON BELLOWS	1
-33	127-0301-02-1	PLATE, back	1
-34	127-0301-03-3	PLATE, back	1
-35	C5000-120451	BOLT, 12 x 45	4
-36	127-0201-01-3	BASE	1
-37	C5010-080161	BOLT, socket-head, 8 x 16	3
-38	123-7211-03-1	PULLEY	1
-39	171-0221-17	WASHER, lock	1
-40	05131-000161	NUT, round, 16	1
-41	127-0301-06-1	SUPPORT	1
-42	E3012-891-001	LIMIT-SWITCH, YAMATAKE, LSI-J	1
-43	C5010-050351	BOLT, socket-head, 5 x 35	2
-44	C5010-080161	BOLT, socket-head, 8 x 16	2
-45	127-0301-04-2	GIB	1
-46	C5029-000081	BOLT, gib	1
-47	H1023-1014-48-1	WIPER, NITTA Slide seal type-SS #0	1
-48	H1023-1014-49-1	WIPER, NITTA Slide seal type-SS #0	1
-49	H1023-1014-47-1	WIPER, NITTA Slide seal type-SS #0	1
-50	C5040-005081	SCREW, pan-head, 5 x 8	6
14-51	H1023-1014-41-1	WIPER	1
-52	H1023-1014-42-1	WIPER	1
-53	C5040-005081	SCREW, pan-head, 5 x 8	4
-54	C5040-005081	SCREW, pan-head, 5 x 8	2
-55	127-0200-08-1	BRACKET	1
-56	M000-6206LLBP05	BEARING, 6206LLBP5	1
-57	D5480-030150	COLLAR, distance, inner, 30 x 40 x 15	1
-58	M000-6206LLBP5	BEARING, 6206LLBP5	1
-59	D5420-304350	COLLAR, holder, bearing, 30 x 43 x 5	1
-60	C5153-000300	WASHER, lock, 30	1
-61	C5131-000301	NUT, round, 30	1
-62	127-0301-05-1	BRACKET	1
-63	C5040-005081	SCREW, pan-head, 5 x 8	2
-64	C5010-080201	BOLT, socket-head, 8 x 20	6
-65	C5010-080351	BOLT, socket-head, 8 x 35	4
-66	127-0200-06	COVER	1
-67	C5131-000301	NUT, round, 30	1
-68	C5153-000300	WASHER, lock, 30	1
-69	127-0200-05	COLLAR	1
-70	127-0200-04	COLLAR	1
-71	M009-0006-62	BEARING, 30TAC62DB	1
-72	127-0200-03-1	COLLAR	1
-73	127-0200-02	COLLAR	1
-74	127-0201-04-1	BRACKET	1
-75	H1032-0002-01	FELT	1
-76	H1030-1001-58	STOPPER	1
-77	C5040-005101	SCREW, pan-head, 5 x 10	2

SHEET NO. 14 UPPER SADDLE AND Z-AXIS BALL-SCREW, – 2ST –

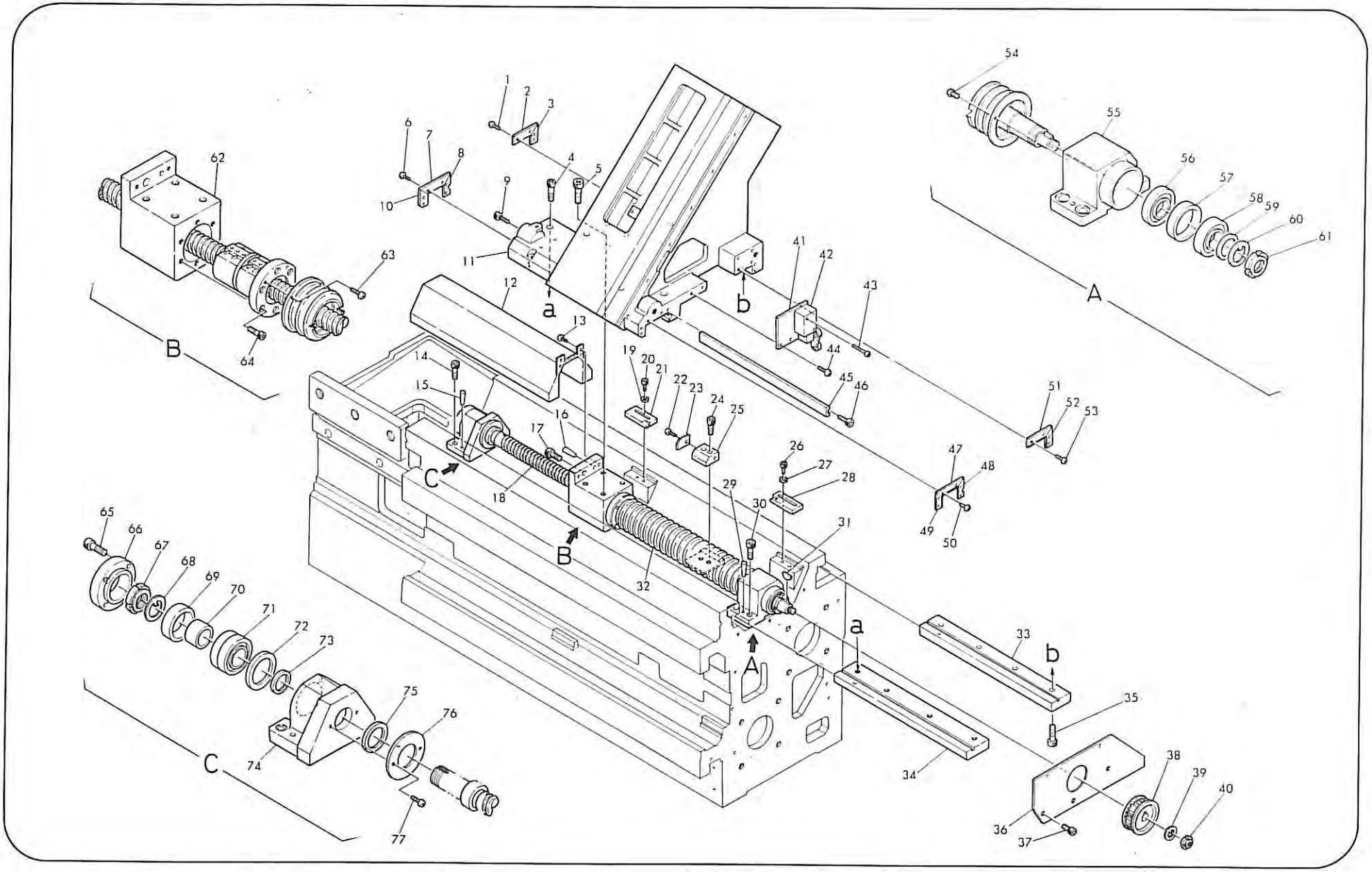

SHEET NO. 15 LOWER SADDLE AND Z-AXIS BALL-SCREW, – 2ST –

INDEX NO.	PART NO.	DESCRIPTION	Q'TY
15-1	H1024-0000-47	BELLOWS, J-N534043, NIPPON BELLOWS	1
-2	C5010-120401	BOLT, socket-head, 12 x 40	4
-3	C0201-080401	ITP, 8 x 40	2
-4	C0201-080361	ITP, 8 x 36	1
-5	C5010-120351	BOLT, socket-head, 12 x 35	1
-6	C0201-080401	ITP, 8 x 40	2
-7	C5010-120401	BOLT, socket-head, 12 x 40	4
-8	127-0202-05	DOG	1
-9	C5010-050101	BOLT, socket-head, 5 x 10	2
-10	C5040-005101	SCREW, pan-head, 5 x 10	1
-11	H1030-1001-59	STOPPER	1
-12	C5010-120401	BOLT, socked-head, 12 x 40	2
-13	127-0202-04-1	DOG	1
-14	C5040-005081	SCREW, pan-head, 5 x 8	4
-15	127-0202-12-2	COVER	1
-16	C5010-050101	BOLT, socket-head, 5 x 10	2
-17	127-0202-05	DOG	1
-18	C5010-080121	BOLT, socket-head, 8 x 12	3
-19	127-0202-08-1	COVER	1
-20	127-0202-09-1	COVER	1
-21	C5040-005081	SCREW, pan-head, 5 x 8	3
-22	127-0202-11-2	COVER	1
-23	C5040-005081	SCREW, pan-head, 5 x 8	4
-24	C5040-005201	SCREW, pan-head, 5 x 20	2
-25	127-0302-12-1	WIPER	2
-26	127-0302-14-1	COVER	1
-27	H1023-1014-70-1	WIPER, NITTA Slide seal, type-SS #3 L = 64	1
-28	H1032-1004-12-1	WIPER, felt, 96 x 62 x 7	1
-29	C5040-005081	SCREW, pan-head, 5 x 8	2
-30	127-0302-19-1	PLATE	1
-31	H1023-1014-71-1	WIPER, NITTA, Slide seal, type-SS #3 L = 102	1
-32	H1023-1014-73-1	WIPER, NITTA, Slide seal, type-SS #3 L = 48	1
-33	127-0302-22-1	PLATE	1
-34	C5040-005121	SCREW, pan-head, 5 x 12	1
-35	127-0302-18	BOLT	1
-36	C5040-005081	SCREW, pan-head, 5 x 8	7
-37	127-0302-08-1	COVER	1
-38	C5040-005201	SCREW, pan-head, 5 x 20	2
-39	127-0302-15-1	COVER	1
-40	C5040-005141	SCREW, pan-head, 5 x 14	2
-41	H1023-1014-76-1	WIPER, NITTA, Slide seal, type-SS, #3 L = 60	1
-42	C5040-005081	SCREW, pan-head, 5 x 8	3
-43	127-0302-16-2	PLATE	1
-44	H1020-1031-43	WIPER, 240 x 130.6 x 2	1
-45	C5040-005100	SCREW, pan-head, 5 x 10	2
-46	127-0302-17-1	PLATE	1
-47	127-0302-02-1	PLATE	1
-48	H1032-0002-26	FELT	1
-49	C5010-120451	BOLT, socket-head, 12 x 45	4
-50	127-0302-01-2	SADDLE, lower	1
-51	C5040-005081	SCREW, pan-head, 5 x 8	4
-52	C5010-120801	BOLT, socket-head, 12 x 80	4
-53	C5010-160701	BOLT, socket-head, 16 x 70	4
-54	127-0202-06-1	SUPPORT	1
-55	C5010-080161	BOLT, socket-head, 8 x 16	2
-56	E3012-891-005	LIMIT-SWITCH, YAMATAKE, 3LS1-J	1
-57	C5160-000051	WASHER, spring, 5	4
-58	C5040-005351	SCREW, pan-head, 5 x 35	4
-59	127-0302-02-2	GIB	1
-60	127-0302-18	BOLT	1

INDEX NO.	PART NO.	DESCRIPTION	Q'TY
15-61	H1023-1014-71-1	WIPER, NITTA, Slide seal, type-SS, #3 L = 102	1
-62	H1023-1014-72-1	WIPER, NITTA, Slide seal, type-SS, #3 L = 48	1
-63	H1023-1014-69-1	WIPER, NITTA, Slide seal, type-SS, #3 L = 64	1
-64	C5040-005081	SCREW, pan-head, 5 x 8	6
-65	127-0302-13-1	COVER	1
-66	127-0302-11	WIPER	2
-67	C5040-005141	SCREW, pan-head, 5 x 14	2
-68	H1023-1014-76-1	WIPER, NITTA, Slide seal, type-SS, #3 L = 60	1
-69	C5040-005161	SCREW, pan-head, 5 x 8	2
-70	127-0302-15-1	COVER	1
-71	C5040-005081	SCREW, pan-head, 5 x 8	2
-72	C5010-050101	BOLT, socket-head, 5 x 10	4
-73	127-0302-10	PLATE	1
-74	C5040-005081	SCREW, pan-head, 5 x 14	2
-75	H1023-1014-75-1	WIPER, NITTA, Slide seal, type-SS, #4	1
-76	127-0302-18	BOLT	1
-77	127-0302-04-1	PLATE, back	1
-78	F100-190-00980	O-RING, P10	2
-79	127-0302-18	BOLT	1
-80	H1023-1014-74-1	WIPER, NITTA, Slide seal, type-SS, #4	1
-81	C5040-005081	SCREW, pan-head, 5 x 8	2
-82	123-7211-03-1	PULLEY	1
-83	171-0221-17	WASHER, lock	1
-84	C5131-000161	NUT, round, 16	1
-85	127-0302-03-2	GIB	1
-86	C5040-005081	SCREW, pan-head, 5 x 8	2
-87	H1023-1014-78	WIPER, NITTA, Slide seal, type-SS, #3	1
-88	F100-190-00980	O-RING, P10	1
-89	127-0302-05-1	PLATE, back	1
-90	H1023-1014-77	WIPER, NITTA, Slide seal, type-SS, #3	1
-91	C5040-005081	SCREW, pan-head, 5 x 8	2
-92	127-0202-10-1	BASE	1
-93	C5010-080161	BOLT, socket-head, 8 x 16	3
-94	C5000-080351	BOLT, 8 x 35	4
-95	127-0200-06	COVER	1
-96	C5131-000301	NUT, round, 30	1
-97	C5153-000300	WASHER, lock, 30	1
-98	127-0200-05	COLLAR	1
-99	127-0200-04	COLLAR	1
-100	M009-0006-62	BEARING, 30TAC62DB, NSK, pre-load, 200K	1
-101	127-0200-03-1	COLLAR	1
-102	127-0200-02	COLLAR	1
-103	127-0200-01-1	BRACKET	1
-104	H1032-0002-01	FELT, 10 x 10 x 290	1
-105	C6100-000400	RING, felt, 40	1
-106	H1030-1001-58	STOPPER	1
-107	C5040-005101	SCREW, pan-head, 5 x 10	2
-108	C5040-005081	SCREW, pan-head, 5 x 8	4
-109	C5171-004160	KEY, woodruff, 5 x 16	1
-110	127-0200-08-1	BRACKET	1
-111	M000-6206LLBP5	BEARING, 6206LLBP5	1
-112	D5480-030150	COLLAR, distance, inner, 30 x 40 x 15	1
-113	M000-6206LLBP5	BEARING, 6206LLBP5	1
-114	D5420-304350	COLLAR, bearing holder, 30 x 43 x 5	1
-115	05153-000300	WASHER, lock, 30	1
-116	C5131-000301	NUT, round, 30	1
-117	127-0302-06-1	BRACKET	1
-118	H1014-1161-11-2	BALL-SCREW	1
-119	C5040-005081	SCREW, pan-head	4
-120	C5010-080201	BOLT, socket-head	6
-121	127-0202-07-1	COVER	1

SHEET NO. 16 UPPER AND LOWER Z-AXIS DRIVE UNITS

INDEX NO.	PART NO.	DESCRIPTION	Q'TY
		1ST Machine	
16-1	M1132-10300G	BELT, synchro, 300H-100G	1
-2	137-0200-01-2	BASE, motor	1
-3	C5150-000161	WASHER, plain, 16	4
-4	C5000-160451	BOLT, hex., 16 x 45	4
-5	147-0210-15-2	PULLEY	1
-6	M000-6011LLB	BEARING, 6011LLB	1
-7	C5180-000550	SNAP-RING, external, 55	1
-8		KEY, accessory for motor	1
-9		NUT, M10, accessory for motor	1
-10	121-7303-12	WASHER, lock	1
-11	C5160-000121	WASHER, spring, 12	4
-12	C5010-120301	BOLT, socket-head, 12 x 30	4
-13	E-1226-288-011	DC MOTOR, C-800T-25, SANYO	1
-14	912-5040-19	GEAR	1
-15		NUT, accessory for motor	1
-16	C5040-005081	SCREW, pan-head, 5 x 8	5
-17	127-0201-05-1	COVER	1
		2ST Machine	
-20	M1132-10300G	BELT, synchro, 300H-100G	1
-21	137-0200-01-2	BRACKET	1
-22	C5150-000161	WASHER, plain, 16	4
-23	C5000-160451	BOLT, hex., 16 x 45	4
-24	147-0210-15-2	PELLEY	1
-25	M000-6011LLB	BEARING, 6011LLB	1
-26	C5180-000550	SNAP-RING, external, 55	1
-27		KEY, accessory for motor	1
-28		NUT, M10	1
-29	121-7303-12	WASHER	1
-30	C5160-000121	WASHER, spring, 12	4
-31	C5010-120301	BOLT, socket-head, 12 x 30	4
-32	E-1226-288-011	DC MOTOR, C-800T-25, SANYO	1
-33	912-5040-19	GEAR	1
-34		NUT, accessory for motor	1
-35		NUT, M10	1
-36	121-7303-12	WASHER	1
-37	M1132-10300G	BELT, synchro, 300H-100G	1
-38	C5150-000161	WASHER, plain, 16	4
-39	C5000-160401	BOLT, hex., 16 x 45	4
-40	137-0200-01-1	BASE, motor	1
-41	147-0210-15-2	PULLEY	1
-42	M000-6011LLB	BEARING, 6011LLB	1
-43	C5180-000550	SNAP-RING, external, 55	1
-44		KEY, accessory for motor	1
-45	C5160-000121	WASHER, spring, 12	4
-46	C5010-120301	BOLT, socket-head, 12 x 30	4
-47	E1226-288-011	DC MOTOR, C-800T-25, SANYO	1
-48	912-5040-19	GEAR	1
-49		NUT, accessory for motor	1

INDEX NO.	PART NO.	DESCRIPTION	Q'TY
16-50	C5140-000051	WASHER, polished, 5	7
-51	C5040-005101	SCREW, pan-head, 5 x 10	7
-52	127-0202-02-1	COVER	1
		OSP POSITION ENCODER	
-55	912-6510-144	GEAR BOX	1
-56	C5010-050451	BOLT, socket-head, 5 x 45	4
-57	912-1090-01-1	COLLAR, eccentric	1
-58	E5574-295-017	COVER	1
-59	C5010-040121	BOLT, socket-head, 4 x 12	2
-60	H1005-0000-97	NUT	1
-61	912-5040-18-1	GEAR	1
-62	912-1600-04-2	PLATE	1
-63	1911-0172	OSP POSITION ENCODER	1
-64	C5010-050141	BOLT, socket-head, 5 x 14	3
-65	912-8270-03-2	COVER	1
-66	C5040-005101	BOLT, socket-head, 5 x 10	2

SHEET NO. 16 UPPER AND LOWER Z-AXIS DRIVE UNITS

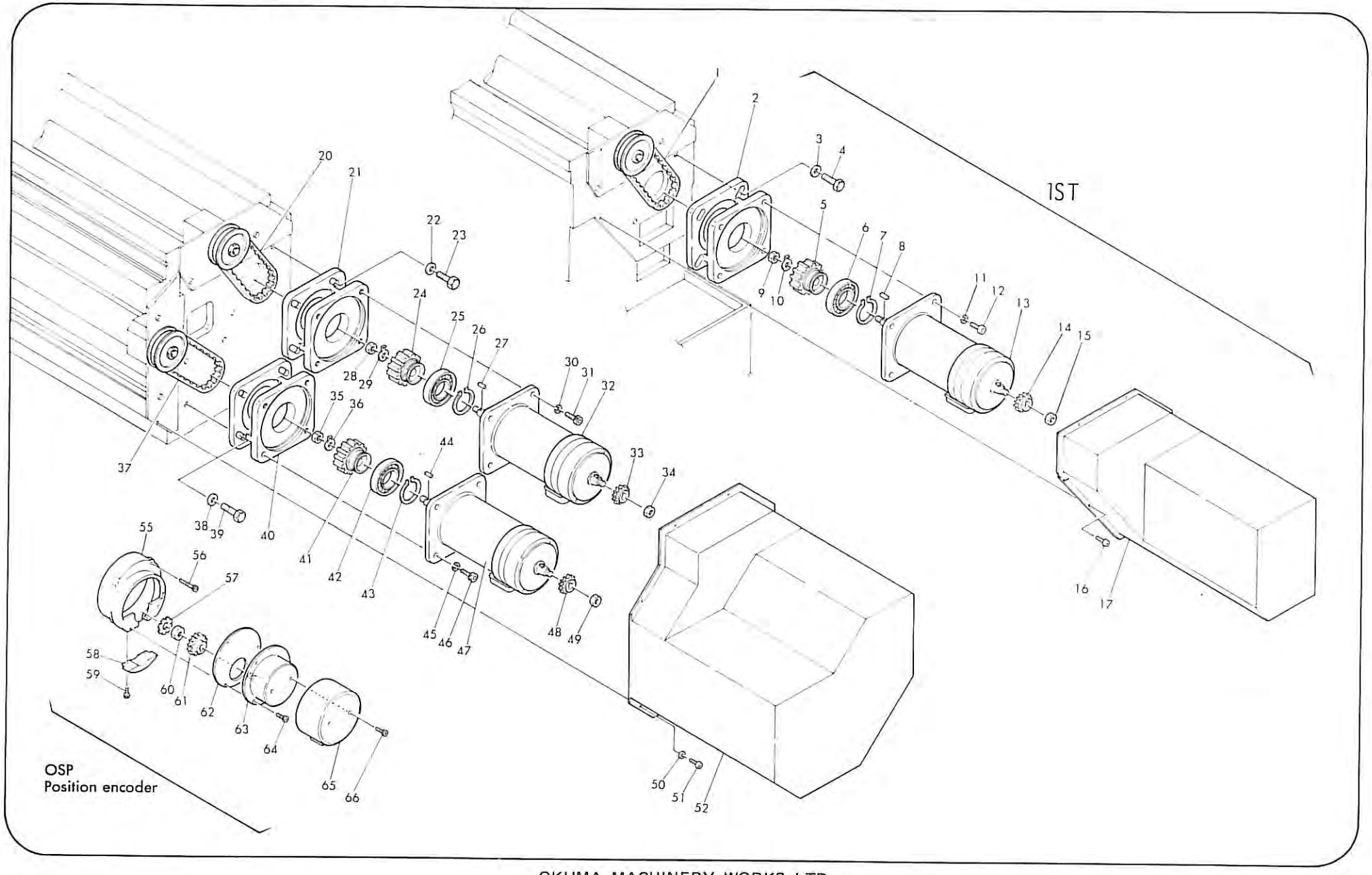

SHEET NO. 17 SADDLE LUBRICATION

INDEX NO.	PART NO.	DESCRIPTION	Q'TY
17-1	H0010-0012-38	UNIT, flow, PSS-3	1
-2	C5040-005251	SCREW, pan-head, 5 x 25	2
-3	H0012-0003-89	DISTRIBUTOR, DA-8	1
-4	H0012-0000-88	PLUG, clamp, PA-4	7
	H0012-0000-89	SLEEVE, PB-4	7
-5	D7781-041200	PIPE, steel, 4 x 1200	4
-6	H0010-0004-34	UNIT, flow, PST-4	2
-7	H0010-0007-96	NUT, PAN-4	7
	H0012-0000-89	SLEEVE, PB-4	7
-8	H0010-0004-33	UNIT, flow, PST-3	4
-9	H0012-0003-90	ELBOW, PI-1	6
-10	D7781-041200	PIPE, steel, 4 x 1200	1
-11	H0010-0007-96	NUT, PAN-4	7
	H0012-0000-89	SLEEVE, PB-4	7
-12	H0010-0004-33	UNIT, flow, PST-3	2
-13	H0012-0003-90	ELBOW, PI-1	6
-14	H0010-0004-34	UNIT, flow, PST-4	4
-15	H0022-0000-33	HOSE, flexible, FHS409	1
-16	H0012-0000-88	PLUG, clamp, PA-4	7
	H0012-0000-89	SLEEVE, PB-4	7
-17	C5040-005251	SCREW, pan-head, 5 x 25	2
-18	H0010-0012-38	UNIT, flow, PSS-3	1
-19	H0012-0901-45	PLUG, PG-8	2
-20	H0012-0003-75	DISTRIBUTOR, DB-10	1

SHEET NO. 17 SADDLE LUBRICATION

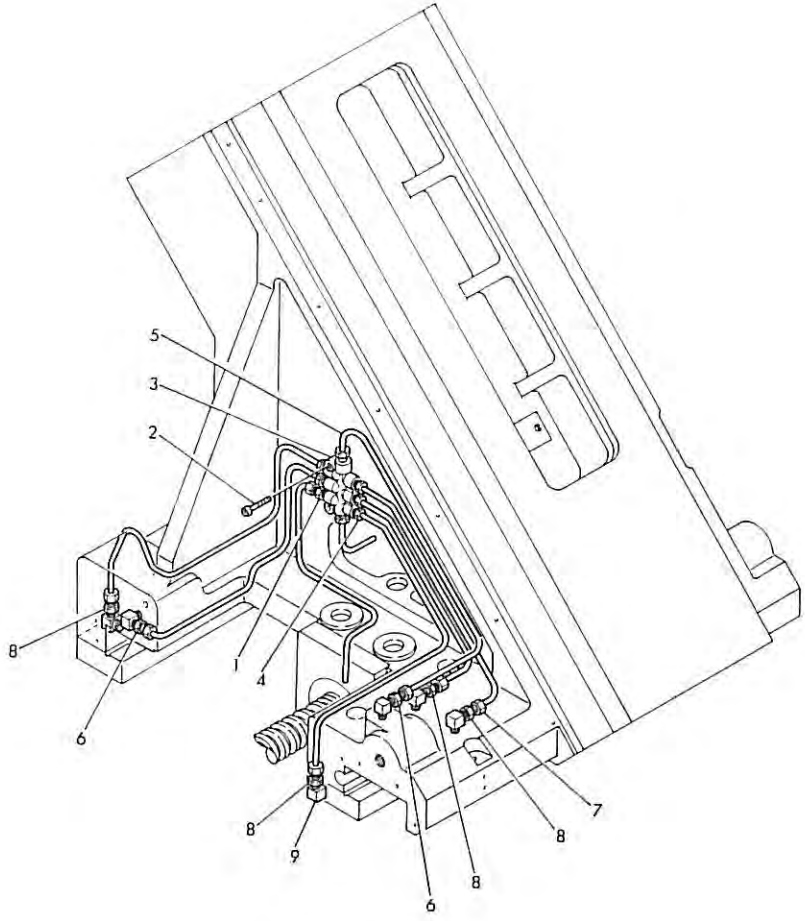

Lower Saddle

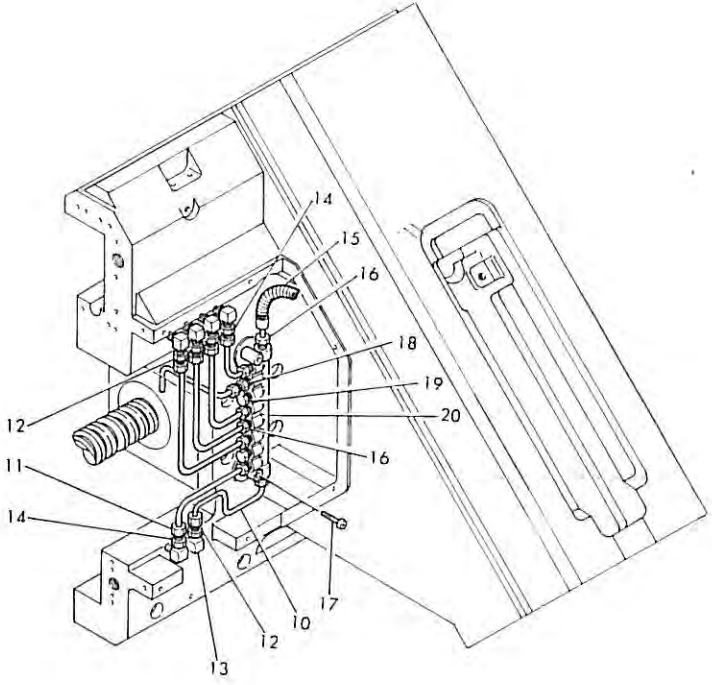

Upper Saddle

SHEET NO. 18 V8 UPPER TURRET (1)

INDEX NO.	PART NO.	DESCRIPTION	Q'TY
18-1	C5040-004081	SCREW, pan-head, 4 x 8	4
-2	H1040-1022-17	PLATE, name	1
-3	127-3300-02-1	COVER, metric	1
	127-3100-03-1	COVER, inch (QT)	1
-4	F100-310-05940	O-RING, G60	1
-5	C5010-050351	BOLT, socket-head, 5 x 35	2
-6	127-3300-13	NUT, bearing, 30	1
-7	C5152-000300	WASHER, lock	1
-8	D5420-304850	COLLAR, bearing, 30 x 48 x 5	2
-9	127-3300-01-2	TURRET, V8, metric	1
	127-3310-01-1	TURRET, V8, inch (QT)	1
-10	C2922-000002	NIPPLE, grease, 1/8	1
-11	127-3300-03	CLUTCH	1
-12	C5010-100201	BOLT, socket-head, 10 x 20	4
-13	C0201-080361	ITP, 8 x 36	2
-14	127-3300-05-1	RING	1
-15	C5050-004251	SCREW, 4 x 25	4
-16	C5050-004101	SCREW, 4 x 10	4
-17	M119-0002-35	ROPE, ϕ3 x 850, MITSUBOSHI, poly-urethane	1
-18	127-3300-04	GUIDE	1
-19	127-3300-03	CLUTCH	1
-20	C0201-080361	ITP, 8 x 36	2
-21	C5010-100201	BOLT, socket-head, 10 x 20	4
-22	C5170-100280	KEY, feather, 10 x 8 x 28	1
-23	127-3300-07-1	SHAFT	1
-24	C5170-100280	KEY, feather, 10 x 8 x 28	1
-25	C5170-100700	KEY, feather, 10 x 8 x 70	1
-26	M004-MB5530DU	METAL, DU, DAIDO, MB5530DU	1
-27	C5010-100301	BOLT, socket-head, 10 x 30	6
-28	127-3300-06	FLANGE	1
-29	H0031-0003-49	PACKING, NOK FU0694FO	1
-30	F100-310-11940	O-RING, G120	1
-31	127-3300-08	PISTON	1
-32	F100-570-11460	O-RING, P115	1
-33	127-3301-01-1	TURRET, V8	1
-34	C5022-000121	PLUG, 12	1
-35	H0031-0003-49	PACKING, NOK, FU0694FO	1
-36	127-3300-09	CAM	1
-37	127-3301-05	GEAR, (127-3302-05)	1
-38	C0201-080501	ITP, 8 x 50	2
-39	C5010-080401	BOLT, socket-head, 8 x 40	4
-40	127-3300-10	GEAR	1
-41	D5420-304850	COLLAR, bearing holder, 30 x 48 x 5	1
-42	C5152-000300	WASHER, lock, 30	1
-43	127-3300-13	NUT, bearing	1
-44	127-3300-14-1	DOG	1
-45	C5034-006101	SET-SCREW, 6 x 10	1

SHEET NO. 18 V8 UPPER TURRET (1)

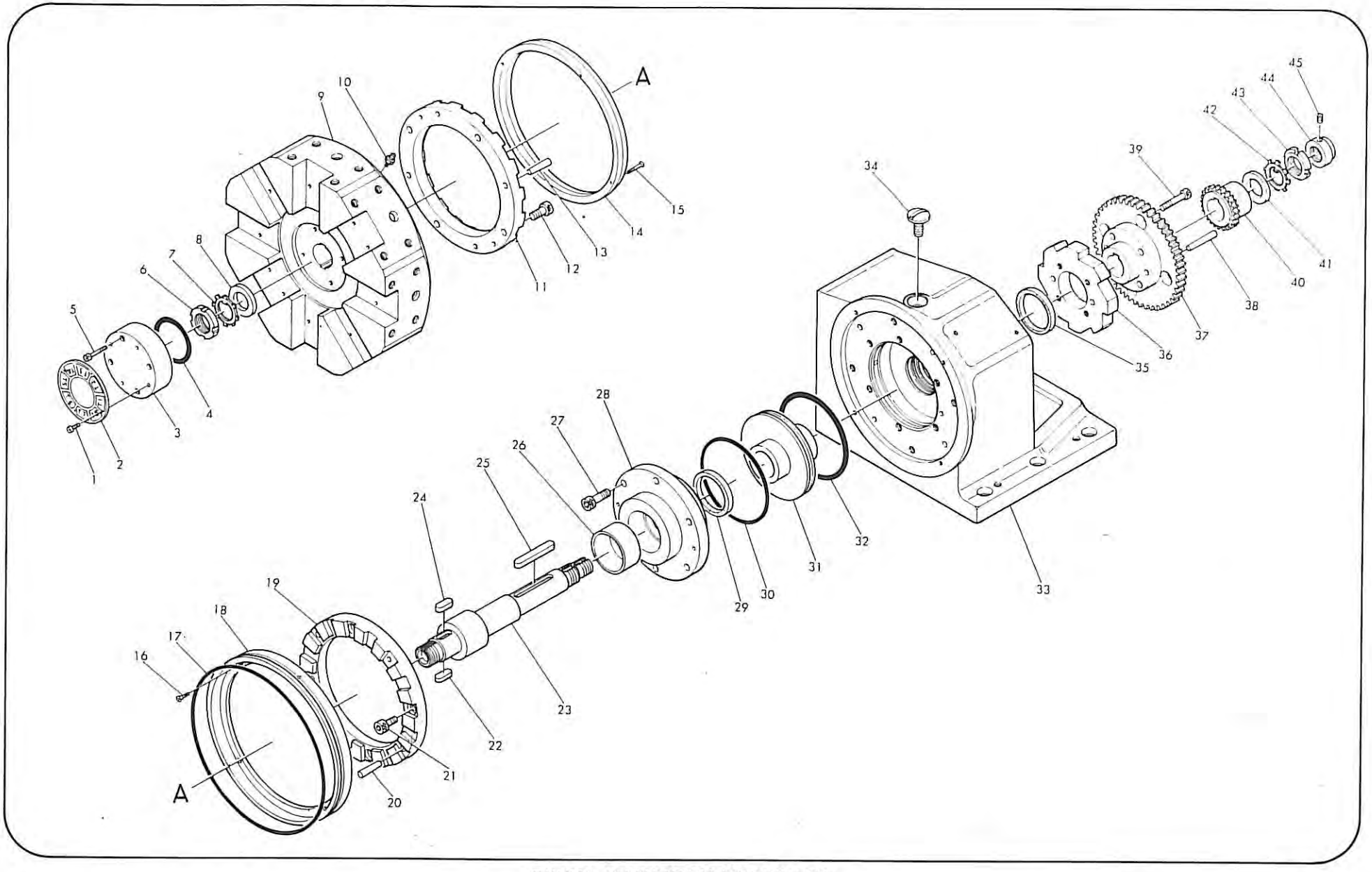

SHEET NO. 19 V8 UPPER TURRET (2)

INDEX NO.	PART NO.	DESCRIPTION	Q'TY
19-1	127-3300-11	GEAR	1
-2	M000-6002ZZ	BEARING, 6002ZZ	2
-3	C5180-000150	SNAP RING, external	1
-4	C5030-004061	SET-SCREW, flat-point, 4 x 6	1
-5	123-3310-40-2	BLOCK	1
-6	C5040-004101	SCREW, pan-head, 4 x 10	2
-7	127-3300-12	SUPPORT	1
-8	C5010-050141	BOLT, socket-head, 5 x 14	2
-9	E2830-292-004	ROTARY-SWITCH, RS-04012CB	1
-10	C5010-040301	BOLT, socket-head, 4 x 30	2
-11	C5160-000041	WASHER, spring, 4	2
-12	E3004-397-189	MICRO-SWITCH, TATEISHI, ZC-N21	1
	E3004-397-192	MICRO-SWITCH (IEC), ZC-N21-MR (VCTIM)	1
-13	C5010-050121	BOLT, socket-head, 5 x 12	2
-14	C5160-000051	WASHER, spring, 5	2
-15	127-3301-15-1	SUPPORT	1
-16	M004-MB5020DU	METAL, DU, MB5020DU, DAIDO	1
-17	C5010-080301	BOLT, socket-head, 8 x 30	3
-18	C0201-060321	ITP, 6 x 32	2
-19	127-3301-03-1	PLATE	1
-20	C5010-100201	BOLT, socket-head, 10 x 20	4
-21	127-3301-06	GEAR	1
-22	C5034-006061	SET-SCREW, 6 x 6	1
-23	127-3301-12	BLOCK	1
-24	C5010-050201	BOLT, socket-head, 5 x 20	2
-25	127-3301-11	BLOCK	1
-26	C5010-050201	BOLT, socket-head, 5 x 20	2
-27	C5010-050141	BOLT, socket-head, 5 x 14	4
-28	127-3300-19	COVER	1
-29	F100-190-00880	O-RING, P9	2
-30	127-3301-09	CYLINDER	1
-31	F100-190-00880	O-RING, P9	2
-32	C5010-080251	BOLT, socket-head, 8 x 25	3
-33	127-3300-15-1	PISTON	1
-34	F100-190-00880	O-RING, P9	1
-35	127-3301-08-1	DISTRIBUTOR	1
-36	C5010-080651	BOLT, socket-head, 8 x 65	4
-37	H0031-0006-29	PACKING, NOK, FU0180, FO	1
-38	F100-190-00880	O-RING, P9	2
-39	F100-350-02770	O-RING, P28	1
-40	C5010-080251	BOLT, socket-head, 8 x 25	3
-41	127-3301-10	PLATE	1
-42	F100-190-00880	O-RING, P9	2
-43	F0001-141-000-01	SOLENOID, VALVE, S, SD4GS-ACB-01B-100AZ-13, ACB-01B-100AZ-13, SUMITOMO-SD4GS	1
	F0001-431-000-04	SOLENOID VALVE (IEC), SD4GS-AB-01B-D24AZ-13-S33	1
-44	C5010-050451	BOLT, socket-head, 5 x 45	4
-45	F100-262-01237	O-RING, JIS-W1530, #112, 2.62 x 12.37	2
-46	F019-0001-15	MOTOR, orbit, SUMITOMO H-070BA4FM	1

INDEX NO.	PART NO.	DESCRIPTION	Q'TY
19-47	127-3300-17	VALVE	1
-48	F100-190-00680	O-RING, P7	1
-49	M101-12180-04510	SPRING, compression, setting, 1,2 x 18 x 45 x 10	1
-50	127-3300-16-2	BUSH	1
-51	C7861-000012	PLUG	1
-52	C5010-050501	BOLT, socket-head, 5 x 50	2
-53	D7870-010022	JOINT, hose, NIPPLE 3/8 YOKOHAMA	2
-54	D7870-010032	JOINT, hose, NIPPLE 1/2 YOKOHAMA	1
-55	127-3301-13	BOX, terminal	1
-56	C5010-050161	BOLT, socket-head, 5 x 16	3
-57	127-3301-14	COVER	1
-58	C5010-050101	BOLT, socket-head, 5 x 10	4

SHEET NO. 19 V8 UPPER TURRET (2)

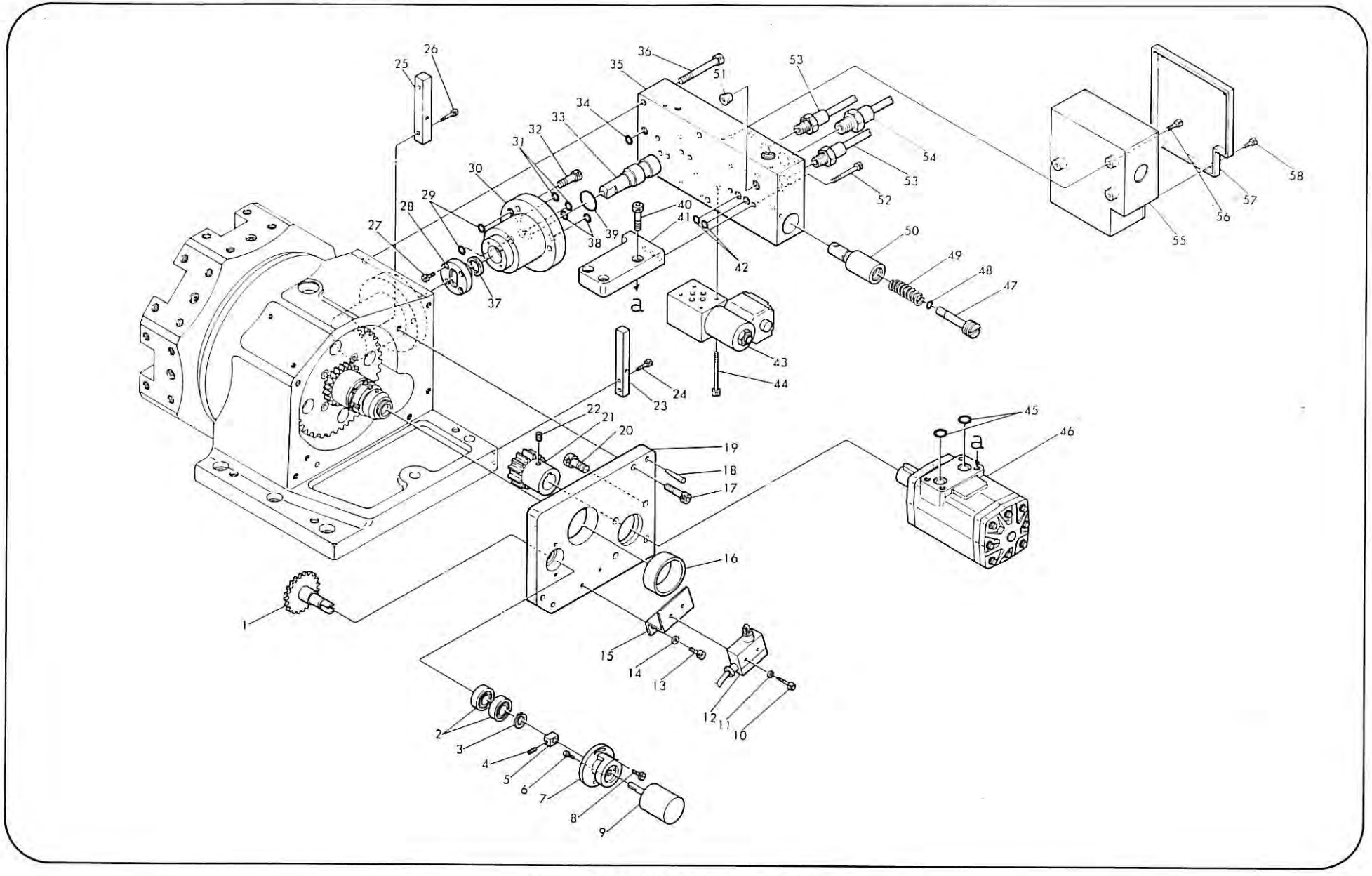

OKUMA MACHINERY WORKS LTD.

SHEET NO. 20 V8 UPPER TURRET COVER

INDEX NO.	PART NO.	DESCRIPTION	Q'TY
20-1	C5000-120451	BOLT, 12 x 45	1
	C5000-120551	BOLT, 12 x 55	1
-2	C5034-012121	SET-SCREW, 12 x 12	2
-3	C0201-060321	ITP, 6 x 32	2
-4	C5010-120351	BOLT, socket-head, 12 x 35	3
-5	127-3301-04-1	LINER	1
-6	127-0311-10-2	COVER	1
-7	C5040-005101	SCREW, pan-head, 5 x 10	11
-8	127-0231-01-1	SUPPORT	1
-9	C5010-080161	BOLT, socket-head, 8 x 16	3
-10	C5140-000051	WASHER, polished, 5	4
-11	C5040-005081	SCREW, pan-head, 5 x 8	4
-12	M109-1017-34-1	PLATE	1
-13	127-0231-04-1	COVER	1
-14	C5010-050101	BOLT, socket-head, 5 x 10	2
-15	C5140-000051	WASHER, polished, 5	4
-16	C5040-005081	SCREW, pan-head, 5 x 8	4
-17	C5010-080201	BOLT, socket-head, 8 x 20	2
-18	127-0231-10-1	SUPPORT	1
-19	H1020-1028-82	PACKING, rubber	1
-20	D5010-081301	BOLT, socket-head, 8 x 130	2
-21	C5010-080601	BOLT, socket-head, 8 x 60	1
-22	H1020-1028-80	PACKING, rubber	1
-23	H1020-1028-81	PACKING, rubber	1
-24	127-3301-02-1	COVER	1
-25	C5010-080701	BOLT, socket-head, 8 x 70	1
-26	M1310-00902010	PACKING, rubber	1
-27	127-0211-13	STAY, (IEC)	1
-28	C5010-050121	BOLT, socket-head, (IEC), 5 x 12	2
-29	C5010-050121	BOLT, socket-head, (IEC), 5 x 12	2
-30	127-0211-12	STAY, (IEC)	1
-31	C5010-050101	BOLT, socket-head, (IEC), 5 x 10	2
-32	127-0211-11	COVER, motor, (IEC)	1
-33	C5010-050101	BOLT, socket-head, (IEC), 5 x 10	2
-34	H1032-1004-08-1	WIPER	1
-35	127-0211-09-1	COVER	1
-36	127-0231-02-1	DOG	2
-37	C5140-000051	WASHER, 5	4
-38	C5010-050251	BOLT, 5 x 25	4
-39	C5140-000081	WASHER, 8	2
-40	C5010-080301	BOLT, 8 x 30	2
-41	H1032-1004-09-1	WIPER	1
-42	127-0231-08-1	BOLT	3
-43	127-0231-07-1	PLATE	3
-44	C5100-000051	NUT, hex., #3, 5	6
-45	127-0231-07-1	PLATE	3
-46	C5160-000051	WASHER, spring, 5	6
-47	C5100-000051	NUT, hex., #3, 5	6
-48	C5100-000051	NUT, hex., #3, 5	2
-49	C5110-000051	NUT, hex., #4, 5	2

INDEX NO.	PART NO.	DESCRIPTION	Q'TY
20-50	127-0231-11-1	STUD	1

SHEET NO. 20 V8 UPPER TURRET COVER

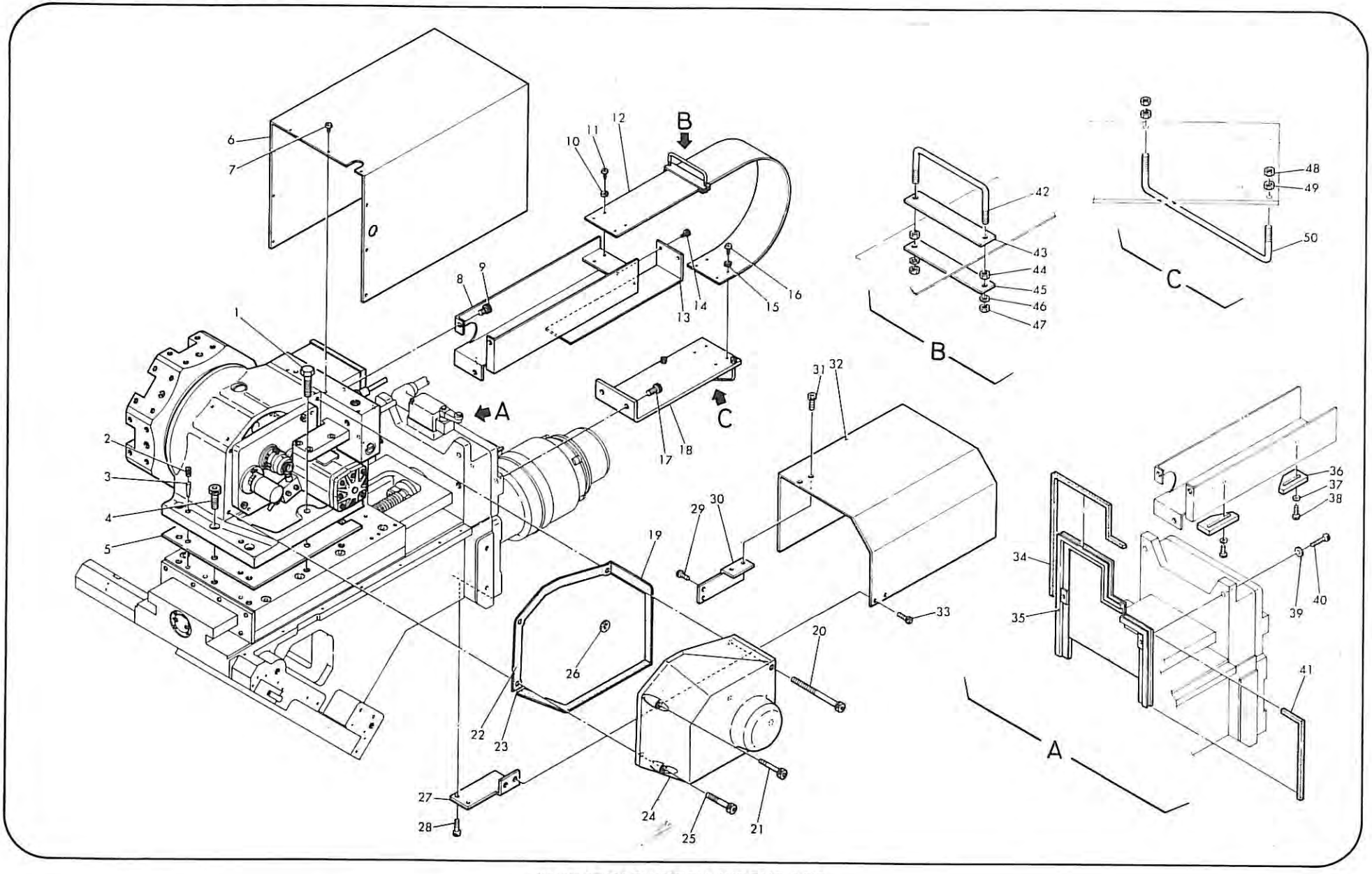

OKUMA MACHINERY WORKS LTD.

SHEET NO. 22 V8 LOWER TURRET (2)

INDEX NO.	PART NO.	DESCRIPTION	Q'TY
22-1	C5010-050101	BOLT, socket-head, 5 x 10	3
-2	127-3302-16	COVER	1
-3	C5010-050101	BOLT, socket-head, 5 x 10	2
-4	127-3302-15	BOX, terminal	1
-5	127-3300-17	VALVE	1
-6	F100-190-00680	O-RING, P7	1
-7	M101-12180-04510	SPRING, compression, setting, 1.2 x 18 x 45 x 10	1
-8	127-3300-16-2	BUSH	1
-9	127-3302-10-2	DISTRIBUTOR	1
-10	C5010-080451	BOLT, socket-head, 8 x 45	2
-11	C5010-080301	BOLT, socket-head, 8 x 30	1
-12	F0001-141-000-01	SOLENOID VALVE, S, SUMITOMO, SD4GS-ACB-01B-100AZ-13	1
	F0001-431-000-04	SOLENOID VALVE, (IEC) SD4GS-AB-01B-D24AZ-13-S33	1
-13	C5010-050451	BOLT, socket-head, 5 x 45	4
-14	C5010-080201	BOLT, socket-head, 8 x 20	2
-15	F1113-010-01703	OIL SEAL, G10 x 17 x 3	2
-16	127-3302-14	COVER	1
-17	H0031-0002-81	PACKING, NOK, FU0064FO	2
-18	F100-190-00880	O-RING, P5	2
-19	C5010-05016	BOLT, socket-head, 5 x 16	2
-20	127-3302-12-1	PLATE	1
-21	C5010-080251	BOLT, socket-head, 8 x 25	2
-22	F100-262-01237	O-RING, JIS-W1530, #112, 2.62 x 12.37	2
-23	F019-0001-15	MOTOR, orbit, SUMITOMO, H-070BA4FM	1
-24	C5034-006101	SET-SCREW, 6 x 10	1
-25	C5010-080251	BOLT, socket-head, 8 x 25	1
-26	127-3302-09-1	FLANGE	1
-27	C5010-100161	BOLT, socket-head, 10 x 16	2
-28	127-3302-08-1	GEAR	1
-29	C5034-006061	SET-SCREW, 6 x 6	1
-30	F100-240-01480	O-RING, P15	2
-31	C5010-080251	BOLT, socket-head, 8 x 25	2
-32	127-3302-13	BLOCK	1
-33	F100-190-00880	O-RING, P9	2
-34	127-3302-11	CYLINDER	1
-35	F100-190-00880	O-RING, P9	1
-36	H0031-0006-29	PACKING, NOK, FU0180FO, IDI 18 x 26 x 5	1
-37	127-3300-19	COVER	1
-38	C5010-050141	BOLT, socket-head, 5 x 14	4
-39	F100-190-00880	O-RING, P-9	2
-40	C5010-080351	BOLT, socket-head, 8 x 35	3
-41	F100-190-00880	O-RING, P9	1
-42	F100-350-02770	O-RING, P28	1
-43	127-3300-15-1	PISTON	1
-44	C5010-050201	BOLT, socket-head, 5 x 20	2
-45	127-3302-18-2	BLOCK	1
-46	C5010-100301	BOLT, socket-head, 10 x 30	2
-47	127-3300-11	GEAR	1

INDEX NO.	PART NO.	DESCRIPTION	Q'TY
22-48	M004-MB5020DU	METAL, DU, MB5020DU, DAIDO	1
-49	127-3302-03-1	PLATE	1
-50	C5010-080251	BOLT, socket-head, 8 x 25	3
-51	M000-6002ZZ	BEARING, 6002ZZ, M15 x 32 x 9	2
-52	C5180-000150	SNAP-RING, external, 15	1
-53	127-3300-12	SUPPORT	1
-54	C5010-050141	BOLT, socket-head, 5 x 14	2
-55	E2830-292-004	ROTARY-SWITCH, RS-04012CB	1
-56	C5040-004101	SCREW, pan-head, 4 x 10	2
-57	123-3310-40-2	BLOCK	1
-58	C5030-004061	SET-SCREW, flat-point, 4 x 6	1
-59	C5010-040301	BOLT, socket-head, 4 x 30	2
-60	05160-000041	WASHER, spring, 4	2
-61	E3004-397-189	MICRO-SWITCH, TATEISHI, ZC-N2L	1
	E3004-397-192	MICRO-SWITCH, (IEC), ZC-N21-MR (VCTIM)	1
-62	C5010-050121	BOLT, socket-head, 5 x 12	2
-63	C5160-000051	WASHER, spring, 5	2
-64	127-3302-17	SUPPORT	1
-65	127-3302-07	SHAFT	1
-66	C5201-003100	PIN, straight, 3 x 10	1
-67	C5010-080551	BOLT, socket-head, 8 x 55	1
-68	M001-AS1104	BEARING, INA, AS1104, M20 x 35 x 1	1
-69	M001-AXK1104	BEARING, INA, AXK1104, M20 x 35 x 2	1
-70	M001-AS1104	BEARING, INA, AS1104, M20 x 35 x 1	1
-71	M001-WS81104	BEARING, INA, WS81104, M20 x 35 x 2	1
-72	M001-HMK2026LL	BEARING, INA, HMK2026LL	1
-73	127-3302-06	GEAR	1
-74	C5180-000200	SNAP-RING, external, 20	1

SHEET NO. 22 V8 LOWER TURRET (2)

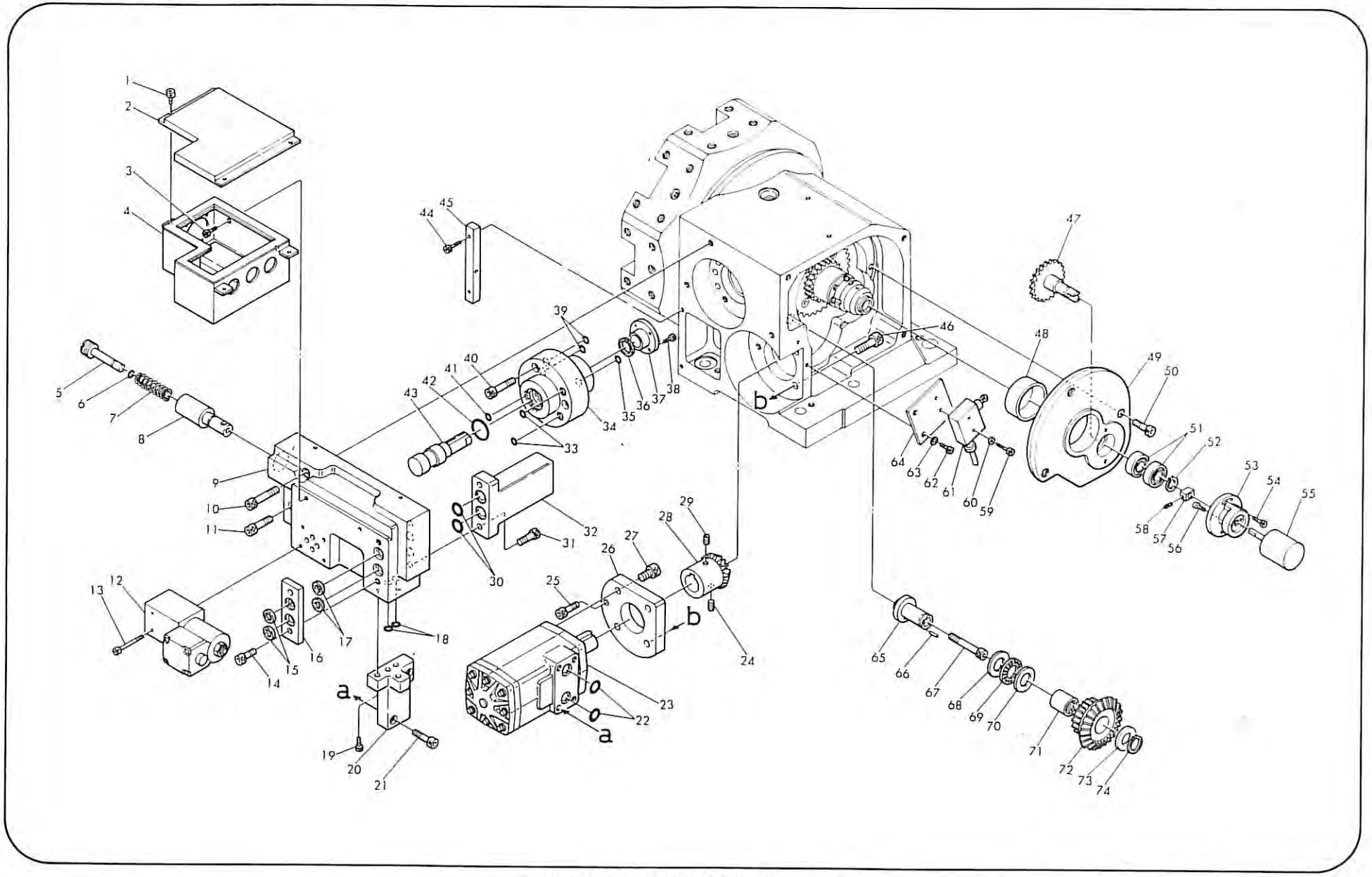

SHEET NO. 23 V8 LOWER TURRET COVER

INDEX NO.	PART NO.	DESCRIPTION	Q'TY
23-1	C5010-050101	BOLT, socket-head, 5 x 10	2
-2	C5040-005101	SCREW, pan-head, 5 x 10	5
-3	127-0232-09-1	COVER	1
-4	C5140-000051	WASHER, polished, 5	2
-5	C5010-050201	BOLT, socket-head, 5 x 20	1
-6	127-0232-10-1	LINER	1
-7	D5211-040160	PIN, spring, 4 x 16	4
-8	H1032-0002-09	FELT, 5 x 5 x 330	1
-9	H1032-0002-08	FELT, 5 x 5 x 260	1
-10	H1032-0002-05	FELT, 5 x 5 x 80	1
-11	H1032-0002-06	FELT, 5 x 5 x 97	1
-12	H1032-0002-07	FELT, 5 x 5 x 250	1
-13	127-0232-02-1	JOINT	1
-14	C5010-050121	BOLT, socket-head, 5 x 12	4
-15	127-0232-01-1	JOINT	1
-16	C5180-000300	SNAP-RING, external, 30	1
-17	C5010-080201	BOLT, socket-head, 8 x 20	2
-18	127-0232-02-1	JOINT	1
-19	C5010-050121	BOLT, socket-head, 5 x 12	4
-20	127-0232-01-1	JOINT	1
-21	C5180-000300	SNAP-RING, external, 30	1
-22	127-0232-03	SUPPORT	1
-23	C5010-080351	BOLT, socket-head, 8 x 35	2
-24	C5035-008201	SET-SCREW, dog-point, 8 x 20	4
-25	127-0232-04-1	JOINT	1
-26	F100-190-00980	O-RING, P10	2
-27	127-0232-07	COVER	1
-28	C5010-050101	BOLT, socket-head, 5 x 10	2
-29	127-0232-06	PIPE	2
-30	C5031-006101	SET-SCREW, 6 x 10	2
-31	C7861-00002	PLUG, 1/8	2
-32	D2781-001022	JOINT, pipe, A-10-PT3/8	4
-33	D7781-100400	PIPE, steel, 10 x 400	2
-34	C5040-005081	SCREW, pan-head, 5 x 8	4
-35	C5140-000051	WASHER, polished, 5	4
-36	127-0232-08-1	COVER	1
-37	C5140-000051	WASHER, polished, 5	1
-38	C5010-050101	BOLT, socket-head, 5 x 10	1
-39	C5010-050101	BOLT, socket-head, 5 x 10	3
-40	C5140-000051	WASHER, polished, 5	3
-41	127-0232-16-1	COVER	1
-42	C5010-120351	BOLT, socket-head, 12 x 35	2
	C5010-120601	BOLT, socket-head, 12 x 60	1
-43	C5034-012121	SET-SCREW, 12 x 12	2
-44	C0201-120301	ITP, 12 x 30	2
-45	127-3302-04-1	LINER	1
-46	C5000-120451	BOLT, 12 x 45	1
	C5000-120501	BOLT, 12 x 50	1
-47	H1020-1029-76	PACKING, rubber	1
-48	127-3302-02-1	COVER	1

INDEX NO.	PART NO.	DESCRIPTION	Q'TY
23-49	C5010-080351	BOLT, socket-head, 8 x 35	1
-50	H1020-1029-78	PACKING, rubber	1
-51	C5010-080551	BOLT, socket-head, 8 x 55	1
-52	H1020-1029-77	PACKING	1
-53	C5010-080451	BOLT, socket-head, 8 x 45	1
-54	C5010-080161	BOLT, socket-head, 8 x 16	4
-55	H1020-1029-88-1	PACKING	1
-56	127-0232-12-1	BOX, terminal	1
-57	C5000-080121	BOLT, 8 x 12	3
-58	127-0232-13	COVER	1
-59	C5010-050121	BOLT, socket-head, 5 x 12	6
-60	127-0212-14-2	COVER, motor	1
-61	C5010-050101	BOLT, socket-head, 5 x 10	6
-62	C5040-005101	SCREW, pan-head, 5 x 10	1
-63	127-0232-11-1	COVER	1

SHEET NO. 24 TOOLING (Qualified Turret, Inch System)

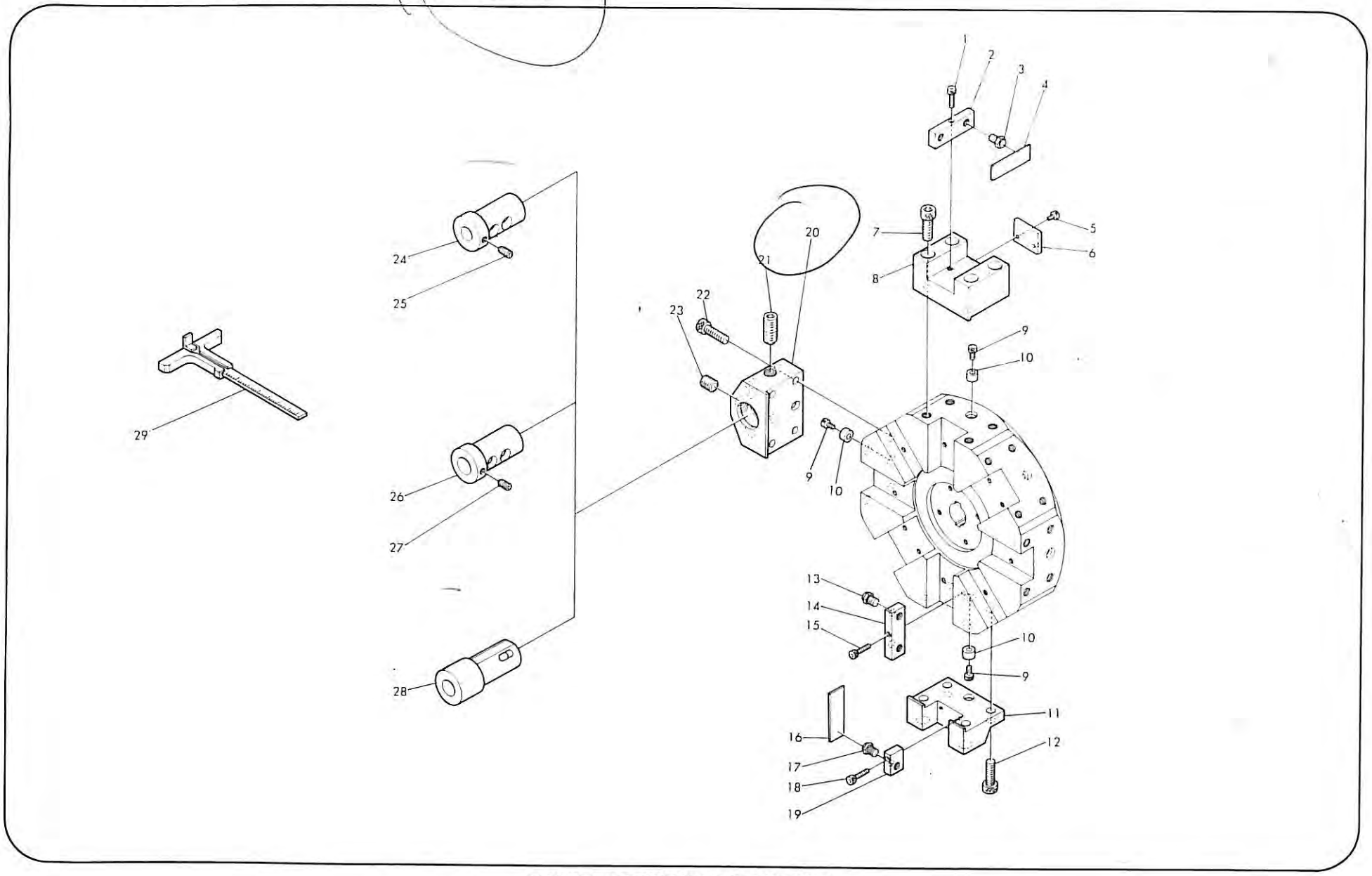

OKUMA MACHINERY WORKS LTD.

SHEET NO. 25 TOOLING (Qualified Turret, Metric System)

INDEX NO.	PART NO.	DESCRIPTION	Q'TY
25-1	C5010-050251	BOLT, socket-head, 5 x 25	1
-2	127-8306-62-1	SPACER	1
-3	123-3322-04	BOLT	2
-4	C5010-120351	BOLT, socket-head, 12 x 35	4
-5	127-8300-01	OD TOOLHOLDER, II	1
-6	C5010-060121	BOLT, 6 x 12	8
-7	127-3300-20	BLOCK	8
-8	J9811-7700-160035	SET-SCREW, flat-point, 16 x 35	2
-9	C5010-120351	BOLT, socket-head, 12 x 35	4
-10	123-8810-61-7	HOLDER	1
-11	J9811-7700-160016	SET-SCREW, flat-point, 6 x 16	2
-12	123-3322-04	BOLT	16
-13	127-3300-18-1	SPACER	8
-14	C5010-050251	BOLT, socket-head, 5 x 25	8
-15	127-8300-03	OD TOOLHOLDER, II	1
-16	C5010-120351	BOLT, socket-head, 12 x 35	4
-17	123-3322-04	BOLT	1
-18	C5010-050251	BOLT, socket-head, 5 x 25	1
-19	127-8300-04-1	SPACER	1
-20	C5035-010161	SET-SCREW, dog-point, 10 x 16	3
-21	123-8812-08	HOLDER	1
-22	C5035-010201	SET-SCREW, dog-point, 10 x 20	2
-23	123-8812-09-1	HOLDER	1
-24	C5035-012251	SET-SCREW, dog-point, 12 x 25	2
-25	123-8810-78	HOLDER	1
-26	123-8810-79-1	SLEEVE, drill	1
-27	123-8810-77	SLEEVE, drill	1
-28	123-8810-06-3	SLEEVE, drill	1
-29	123-8810-80	SLEEVE, drill	1
-30	123-8812-01-1	SLEEVE, boring bar	1
-31	C5035-008201	SET-SCREW, dog-point, 8 x 20	1
-32	123-8812-02-1	SLEEVE, boring bar	1
-33	C5035-0080201	SET-SCREW, dog-point, 8 x 20	1
-34	123-8812-03-1	SLEEVE, boring bar	1
-35	C5035-008161	SET-SCREW, dog-point, 8 x 16	1
-36	123-8812-04-1	SLEEVE, boring bar	1
-37	C5035-008161	SET-SCREW, dog-point, 8 x 16	1
-38	123-8812-05-1	SLEEVE, boring bar	1
-39	C5035-008121	SET-SCREW, dog-point, 8 x 12	1
-40	123-8812-06-1	SLEEVE, boring bar	1
-41	C5035-008101	SET-SCREW, dog-point, 8 x 10	1
-42	T019-096-000-04	CALIPER, tool setting, (metric)	1

SHEET NO. 25 TOOLING (Qualified Turret, Metric System)

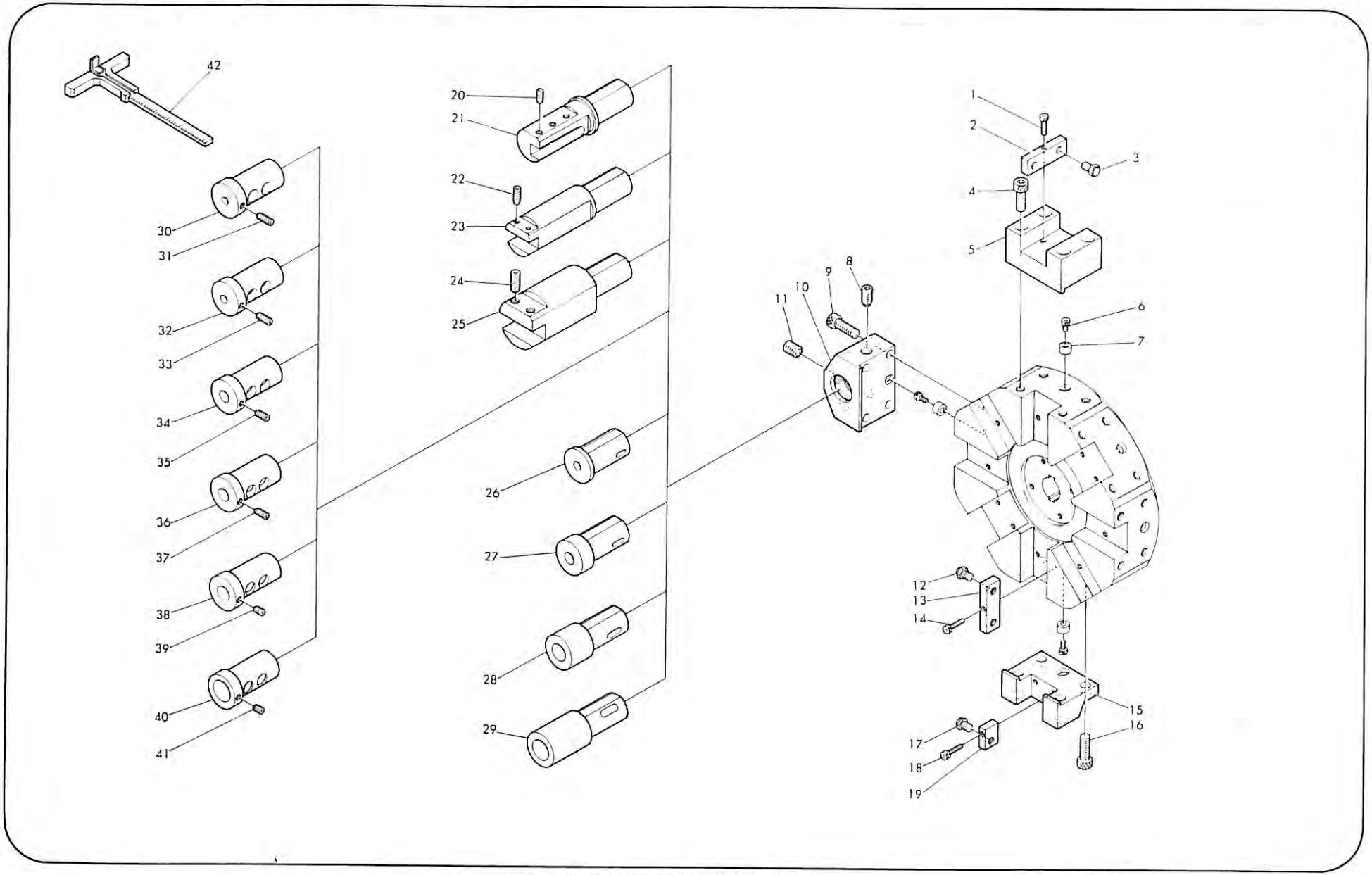

SHEET NO. 26 TAILSTOCK (1), – 1SC –

INDEX NO.	PART NO.	DESCRIPTION	Q'TY
26-1	C5010-050161	BOLT, socket-head, 5 x 16	4
-2	127-3410-03-1	COVER	1
-3	F1104-090-11505	OIL-SEAL, VB901155	1
-4	123-0410-36	SLEEVE	1
-5	C5010-160501	BOLT, socket-head, 16 x 50	4
-6	127-3410-04-1	LINER	1
-7	C5010-050081	BOLT, socket-head, 5 x 8	4
-8	C5030-008121	SET-SCREW, flat-point, 8 x 12	2
-9	D5089-080201	SCREW, pin, 8 x 20	2
-10	C5410-000301	COLLAR, 30	2
-11	M009-0008-50	BEARING, 300, 301-11-B030	1
-12	C5029-000051	BOLT, gib, 5 x 20	1
-13	127-3410-06	GIB	1
-14	C5010-050201	BOLT, socket-head, 5 x 20	3
-15	127-2410-10	HOLDER	1
-16	127-3410-09	SHAFT	1
-17	MB3530DU	BEARING	1
-18	F100-350-03870	O-RING, P39	2
-19	F100-350-02770	O-RING, P28	2
-20	127-3410-17	COLLAR	2
-21	F100-350-03870	O-RING, P39	2
-22	F100-350-02770	O-RING, P28	2
-23	127-3410-18	COLLAR	2
-24	127-3410-02	TAILSTOCK	1
-25	D5201-008300	PIN, straight, 8 x 30	2
-26	C5022-000161	PLUG, 16	2
-27	MB2420	BUSH, DU	2
-28	C5022-000121	PLUG, 12	1
-29	127-3410-01-1	BODY, tailstock	1
-30	C5040-005081	SCREW, pan-head, 5 x 8	1
-31	H0035-0002-01	BAND, pipe, SHOWA, PZ-0110	1
-32	F100-240-02080	O-RING, P21	1
-33	127-3410-28	KEY	1
-34	C5040-005121	SCREW, pan-head, 5 x 12	2
-35	123-0410-10-1	FLANGE	1
-36	C5030-006101	SET-SCREW, flat-point, 6 x 10	1
-37	M120-08-160	WIRE, steel, M0.8 x 160	1
-38	5010-080201	BOLT, socket-head, 8 x 20	4
-39	127-3410-27	LINER	1
-40	H0012-0003-90	ELBOW, PI-1	1
-41	H0010-0004-34	NUT, PST-4	1
-42	H0012-0000-89	SLEEVE, PB-4	1
-43	H0010-0007-96	NUT, PAN-4	1
-44	H0022-0000-36	HOSE, FHS412	1
-45	127-3410-23-1	SHAFT	1
-46	M004-MB4530DU	BUSH, DU	1
-47	127-3410-24	BLOCK	1
-48	M004-MB3530DU	BUSH, DU	1
-49	M004-MB3530DU	BUSH, DU	1
-50	127-3410-25	BLOCK	1

INDEX NO.	PART NO.	DESCRIPTION	Q'TY
26-51	127-3421-04	SHAFT	1
-52	H0031-0006-92	PACKING, NOK, FU0619KO, ISI 50 x 60 x 6	1
-53	C5030-010121	SET-SCREW, flat-point, 10 x 12	2
-54	D5901-000790	BALL, steel, 5/16	2
-55	127-3421-01-1	CYLINDER	1
-56	D2792-093302	HOSE, 70K, 9 x 3300	2
-57	D7870-020022	JOINT, hose, (elbow), 3/8	4
-58	123-6111-06-1	JOINT	1
-59	D5010-121201	BOLT, socket-head, 12 x 120	4
-60	127-3421-03-1	PISTON	1
-61	H0031-0006-93	PACKING, NOK, FUO424KO, ISI 35 x 45 x 6	1
-62	H0031-00006-62	RING, piston, 80 x 3.3 x 3.5	2
-63	F100-570-06960	O-RING, P70	1
-64	127-3421-02	COVER	1
-65	C5010-120251	BOLT, socket-head, 12 x 25	4

SHEET NO. 26 TAILSTOCK (1), – 1SC –

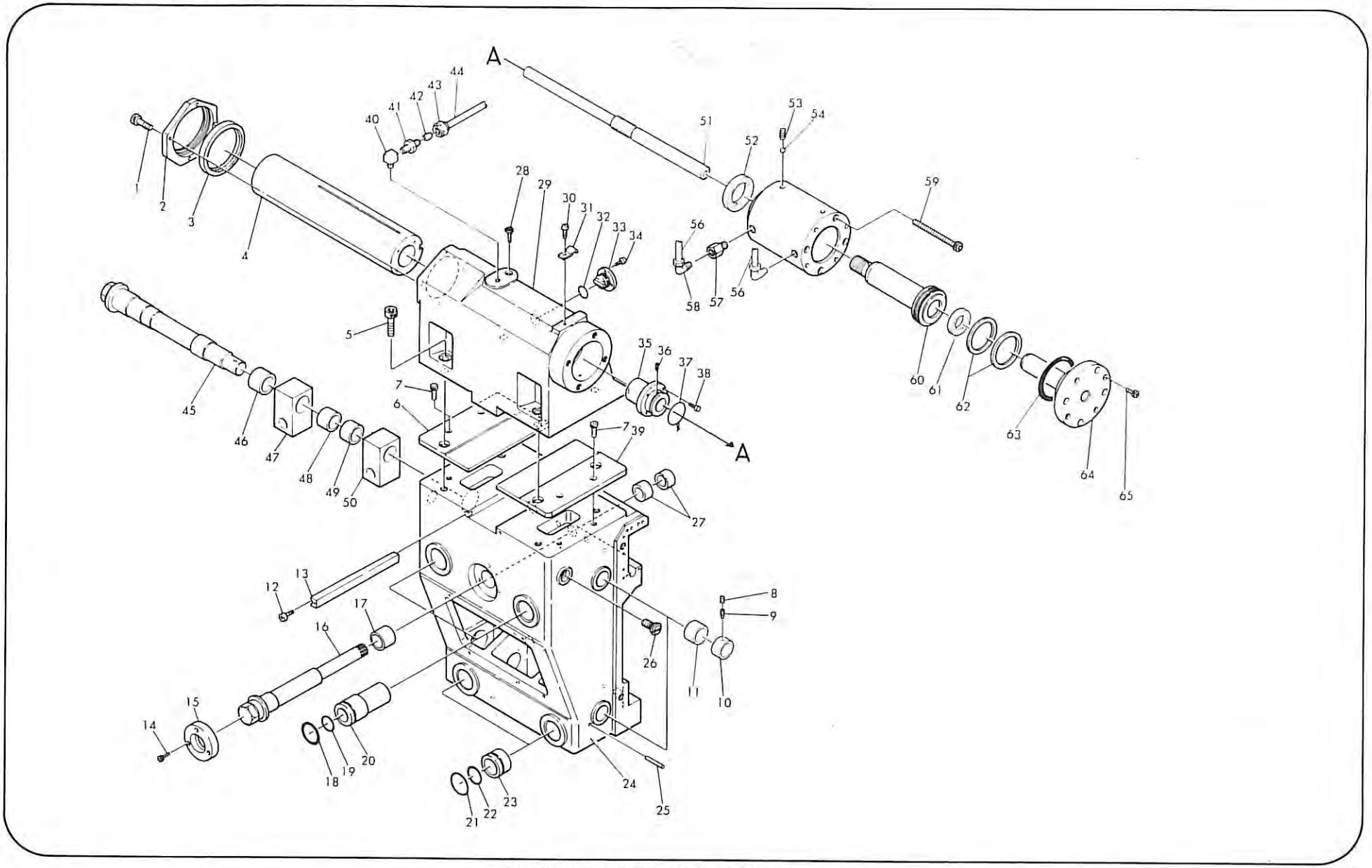

OKUMA MACHINERY WORKS LTD.

SHEET NO. 27 TAILSTOCK (2), – 1SC –

INDEX NO.	PART NO.	DESCRIPTION	Q'TY
27-1	C5132-000281	NUT, shaft, 28	2
-2	127-3410-15-2	SHAFT	1
-3	C5132-000281	NUT, shaft, 28	2
-4	127-3410-15-2	SHAFT	1
-5	C5132-000281	NUT, shaft, 28	2
-6	127-3410-16-2	SHAFT	1
-7	C5132-000281	NUT, shaft, 28	2
-8	127-3410-16-2	SHAFT	1
-9	C5040-005081	SCREW, pan-head, 5 x 8	4
-10	127-3410-08	COVER	1
-11	C5040-005081	SCREW, pan-head, 5 x 8	4
-12	127-3410-07	COVER	1
-13	C5010-120901	BOLT, socket-head, 12 x 90	2
-14	H1023-1014-76-1	WIPER	1
-15	C5040-005081	SCREW, pan-head, 5 x 8	2
-16	127-0302-15-1	COVER	1
-17	C5040-005141	SCREW, pan-head, 5 x 14	2
-18	H1023-1014-71-1	WIPER	1
-19	C5040-005081	SCREW, pan-head, 5 x 8	2
-20	H1023-1014-73-1	WIPER, NITTA, Slide seal, type-SS #3 L = 48	1
-21	C5040-005081	SCREW, pan-head, 5 x 8	2
-22	127-3410-26	COVER	1
-23	C5040-005141	SCREW, pan-head, 5 x 14	4
-24	C5040-005081	SCREW, pan-head, 5 x 8	2
-25	H1023-1014-70-1	WIPER, NITTA, Slide seal, type-SS, #3, L = 64	1
-26	127-0302-18	BOLT	1
-27	127-3410-05-1	GIB	1
-28	C5010-050201	BOLT, socket-head, 5 x 20	5
-29	127-3410-11	RACK	1
-30	127-3410-12	PLATE, back	1
-31	127-0302-18	BOLT	1
-32	H1023-1014-69-1	WIPER, NITTA, Slide seal, type-SS, #3 L = 64	1
-33	C5040-005081	SCREW, pan-head, 5 x 8	2
-34	H1023-1014-71-1	WIPER, NITTA, Slide seal, type-SS #3 L = 102	1
-35	C5040-005081	SCREW, pan-head, 5 x 8	2
-36	H1023-1014-72-1	WIPER, NITTA, Slide seal type-SS #3 L = 48	1
-37	C5040-005081	SCREW, pan-head, 5 x 8	2
-38	127-0302-13-1	COVER	1
-39	C5040-005141	SCREW, pan-head, 5 x 14	4
-40	H1023-1014-76-1	WIPER, NITTA, Slide seal, type-SS #3 L = 60	1
-41	C5040-005081	SCREW, pan-head, 5 x 8	2
-42	127-0302-15-1	COVER	1
-43	C5040-005141	SCREW, pan-head, 5 x 14	2
-44	C5040-005081	SCREW, pan-head, 5 x 8	2
-45	H1023-1014-75-1	WIPER, NITTA, Slide seal, type-SS#4	1
-46	127-3410-20	PLATE, back	1
-47	C5040-005081	SCREW, pan-head, 5 x 8	2
-48	H1023-1014-78	WIPER	1
-49	127-3410-22	PLATE, back, NITTA, Slide seal, type-SS #3	1
-50	127-3410-21	PLATE, back	1

INDEX NO.	PART NO.	DESCRIPTION	Q'TY
27-51	H1023-1014-77	WIPER, NITTA, Slide seal, type-SS #3	1
-52	C5040-005081	SCREW, pan-head, 5 x 8	2
-53	127-3410-19	PLATE, back	1
-54	H1023-1014-74-1	WIPER, NITTA, Slide seal, type-SS #4	1
-55	C5040-005081	SCREW, pan-head, 5 x 8	2
-56	D5201-008120	PIN, straight, 8 x 12	2
-57	C5030-008101	SET-SCREW, flat-point, 8 x 10	4
-58	D5800-006060	PUSHER, 6 x 6	2
-59	127-3410-13	HOLDER	2
-60	C5030-080101	SET-SCREW, flat-point, 8 x 10	4
-61	D5800-006060	PUSHER, 6 x 6	2
-62	127-3410-14	HOLDER	2
-63	D5201-008120	PIN, straight, 8 x 12	2

SHEET NO. 27 TAILSTOCK (2), – 1SC –

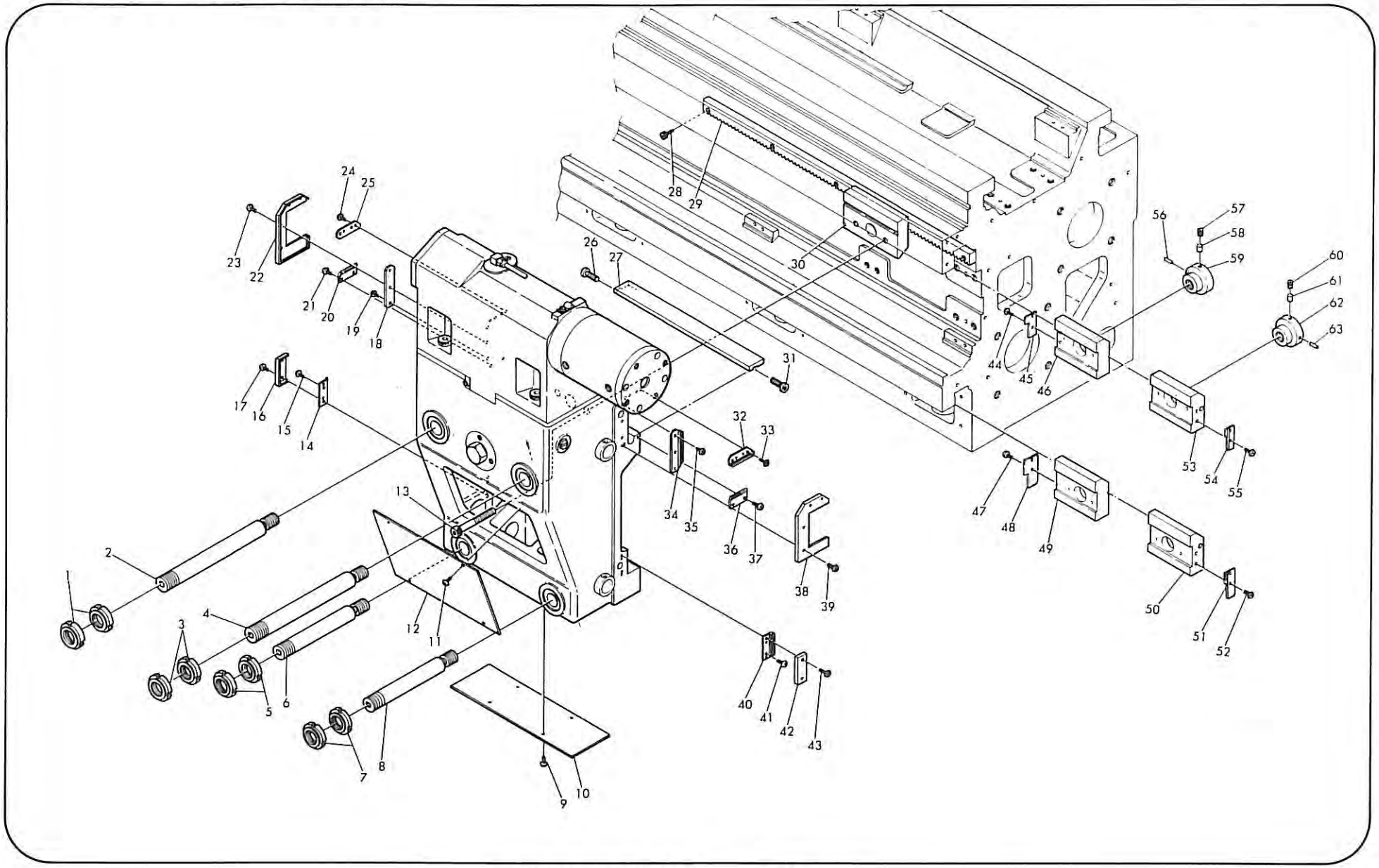

OKUMA MACHINERY WORKS LTD.

SHEET NO. 28 HYDRAULIC POWER UNIT

INDEX NO.	PART NO.	DESCRIPTION	Q'TY
28-1	H0130-0001-59-1	UNIT, hydraulic, standard M.I with tailstock M.I	1
	H0130-0001-79	UNIT, hydraulic, R_2, (IEC), standard M with tailstock M	1
-2	H0130-0001-72	BOX, terminal, standard M.I with tailstock M.I	1
	H0130-0001-80	BOX, terminal, (IEC), standard M with tailstock M	1
-3	C7812-000442	ELBOW, street, M, 3/4	1
-4	C7800-000442	NIPPLE, M, 3/4	1
-5	C7810-000442	ELBOW, M, 3/4	1
-6	D7872-002542	JOINT, hose, for vinyl, 3/4	1
-7	D2765-000351	CLAMP, wire, AK-1035, 35	1
-8	D7792-251600	HOSE, vinyl, with spring, 25 x 1600	1
-9	C5000-080161	BOLT, hex., 8 x 16	3
-10	C5160-000081	WASHER, spring, 8	3
-11	5140-0000-81	WASHER, polished, 8	3
-12	M1310-01103050	SHEET, rubber, M11 x M30 x 5	4
-13	H0130-0001-96	BLOCK, kg/cm^2, (IEC), standard M	1
-14	H0010-0003-89	JOINT, NITTA, L2N-1/2 x PT3/8	2
-15	H0010-0003-89	JOINT, NITTA, L2N-1/2 x PT3/8	2
-16	H0130-0001-70	BLOCK, lb/in^2 standard I, kg/cm^2 standard M	1
-17	H0010-0003-89	JOINT, NITTA, L2N-1/2-PT3/8	2
-18	H0010-0003-89	JOINT, NITTA, L2N-1/2-PT3/8	2
-19	H0130-0001-90	BLOCK, kg/cm^2 with tailstock, M	1
	H0130-0001-94	BLOCK, lb/in^2 with tailstock, I	1
-20	H0010-0003-89	JOINT, NITTA, L2N-1/2 x PT3/8	2
-21	H0010-0003-89	JOINT, NITTA, L2N-1/2 x PT3/8	2
-22	H0010-0003-89	JOINT, NITTA, L2N-1/2 x PT3/8	2
-23	H0130-0001-99	BLOCK, (IEC) with tailstock, M	1
-24	H0010-0003-89	JOINT, NITTA, L2N-1/2 x PT3/8	2
-25	H0010-0003-89	JOINT, NITTA, L2N-1/2 x PT3/8	2
-26	H0010-0003-89	JOINT, NITTA, L2N-1/2 x PT3/8	2
-27	D7870-020032	JOINT, hose, elbow, 1/2	1
-28	H0012-0000-90	ELBOW, SHOWA, PH-4	1
-29	H0012-0000-89	JOINT, SHOWA, PB-4	1
-30	H0012-0000-88	JOINT, SHOWA, PA-4	1
-31	D2792-123352	HOSE, 70K, 1/2 x 3350	1
-32	H0022-0002-01	HOSE, flexible, SHOWA, FHS-418	1
-33	D7870-020022	ELBOW, 3/8	2
-34	D2792-093302	HOSE, 70K, 3/8 x 3300	1
-35	D2792-093252	HOSE, 70K, 3/8 x 3250	1
-36	C7812-00432	ELBOW, street, M, 3/4 x 1/2	1
-37	D7872-002542	JOINT, hose, for vinyl, 3/4 (25)	1
-38	D2765-000351	CLAMP, wire, AK1035, 35	1
-39	D7793-251600	HOSE, vinyl, with tetolon tube, 25 x 1600	1
-40	127-0000-08	SUPPORT	1
-41	C5040-005081	SCREW, pan-head, 5 x 8	2
-42	127-0000-07-2	BLOCK	1
-43	C5010-080301	BOLT, socket-head, 8 x 30	4
-44	F1242-1600-0	TUBE, synflex, NITTA, N2-2-1/4 L = 1600	1
-45	H0010-0002-23	ELBOW, NITTA, L2N-1/4-PT1/4	1
-46	F1245-1200-0	TUBE, synflex, NITTA, N2-2-1/2 L = 1200	1

INDEX NO.	PART NO.	DESCRIPTION	Q'TY
28-47	H0010-0003-89	JOINT, NITTA, L2N-1/2-PT3/8	1
-48	F1245-1200-0	TUBE, synflex, NITTA, N2-2-1/2 L = 1200	1
-49	H0010-0003-89	JOINT, NITTA, L2N-1/2-PT3/8	1
-50	H0022-0002-11	HOSE, synflex, SHOWA, FHS-427	1
-51	H0012-0000-88	JOINT, SHOWA, PA-4	1
-52	H0012-0000-89	JOINT, SHOWA, PB-4	1
-53	H0012-0000-90	JOINT, SHOWA, PH-4	1
-54	H0010-0002-16	JOINT, NITTA, L2N-1/4-PT1/8	1
-55	F1242-1700-0	TUBE, synflex, NITTA, N2-2-1/4 L = 1700	1
-56	F1245-1020-0	TUBE, synflex, NITTA, N2-2-1/2 L = 1020	1
-57	H0010-0002-95	CONNECTOR, hose, NITTA, C2N-1/2-PT3/8	1
-58	F1245-1020-0	TUBE, synflex, NITTA, N2-2-1/2 L = 1020	1
-59	H0010-0002-95	JOINT, NITTA, C2N-1/2-PT3/8	1
-60	D7792-100900	HOSE, vinyl, with spring, 10 x 900	1
-61	D2765-000161	CLAMP, wire, AK-1016, 16	1
-62	D7872-001012	JOINT, hose, for vinyl, 1/4	1
-63	C7846-000412	BUSH, M, 3/4 x 1/4	1
-64	H0010-0002-16	JOINT, NITTA, L2N-1/4-PT1/8	1
-65	F1242-1700-0	TUBE, synflex, NITTA, N2-2-1/4 L = 1700	1
-66	C5010-080161	BOLT, socket-head, 8 x 16	2
-67	127-0000-05-1	PLATE	1
-68	C5010-080161	BOLT, socket-head, 8 x 16	2
-69	D7872-002542	JOINT, hose, for vinyl, 3/4	1
-70	D2765-000351	CLAMP, wire, AK-1035, 35	1
-71	D7792-251600	HOSE, vinyl, with spring, 25 x 1600	1
-72	127-0000-06-1	JOINT	1
-73	H0010-0000-01	JOINT, NITTA, C2N-1/4-PT1/4	1
-74	H0010-0002-95	JOINT, NITTA, C2N-1/2-PT3/8	2
-75	F1245-2280-0	TUBE, synflex, NITTA, N2-2-1/2 L = 2280	2

SHEET NO. 28 HYDRAULIC POWER UNIT

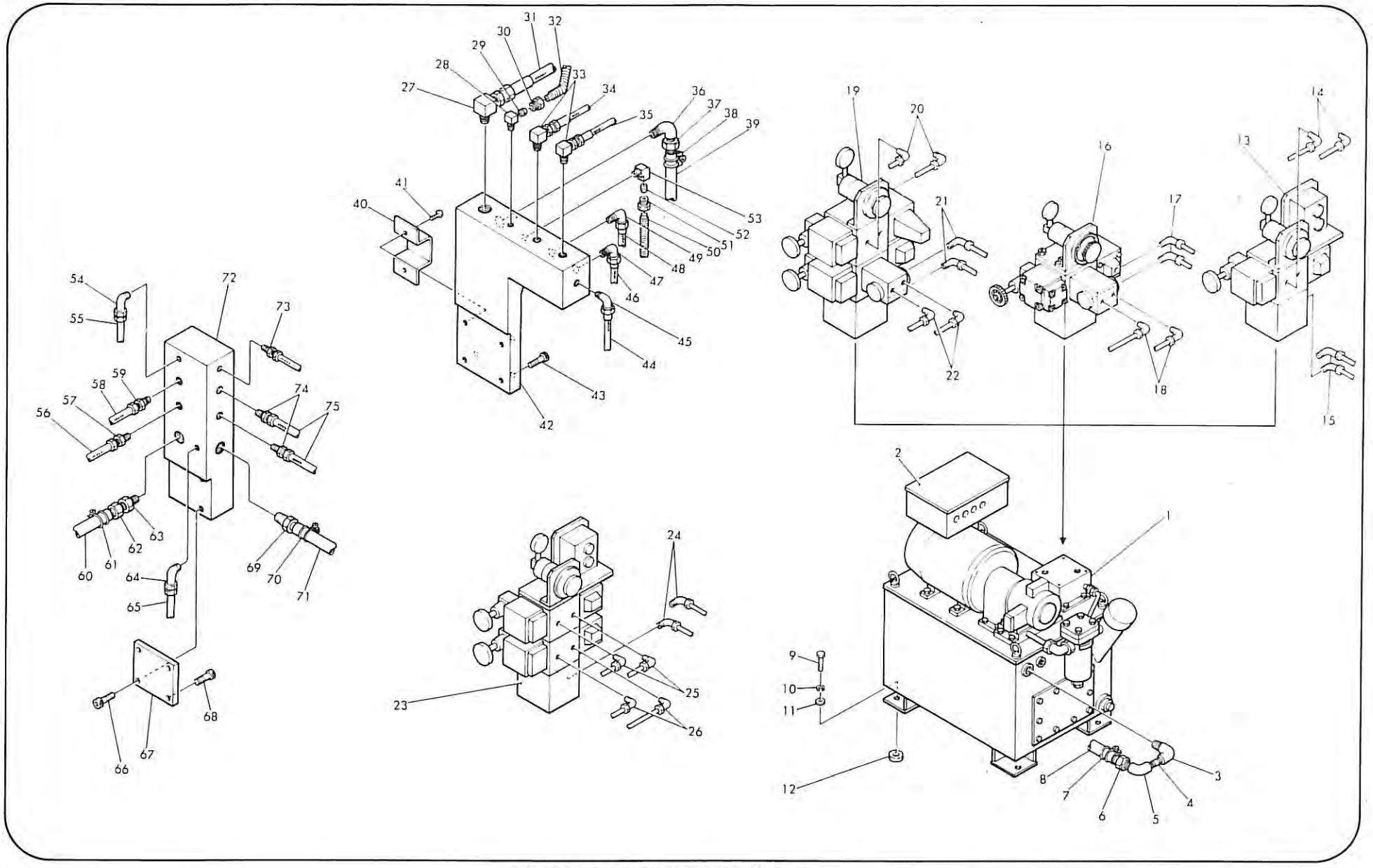

SHEET NO. 29 COOLANT NOZZLE (Upper Turret)

INDEX NO.	PART NO.	DESCRIPTION	Q'TY
29-1	D7780-403000	PIPE, copper, 8 x 300	16
-2	C7770-000042	NUT, pipe, F, 8	16
-3	C7720-000442	NIPPLE, F, TS, 8TS	16
-4	127-6730-12-1	SUPPORT	16
-5	C5010-050121	BOLT, socket-head, 5 x 12	32
-6	C5030-005081	SET-SCREW, flat-point, 5 x 8	3
-7	C5010-050141	BOLT, socket-head, 5 x 14	3
-8	127-6730-08-1	BRACKET	1
-9	C7812-00022	ELBOW, street, M, 3/8	2
-10	C7800-000322	NIPPLE, M, 1/2 x 3/8	1
-11	D2760-00032	COCK, handle, 1/2	1
-12	D7780-604000	PIPE, steel, 16 x 400	1
-13	D2781-001632	JOINT, pipe, NTN-16-PT1/2	1
-14	D7813-000332	ELBOW, 45°, 1/2	1
-15	C5110-000051	NUT hex., #4, 5	1
-16	C5031-006121	SET-SCREW, flat-point, 6 x 12	1
-17	H1023-1015-19	PACKING, rubber, M17 x 13	2
-18	127-6730-10	SLEEVE	1
-19	127-6730-18	PIN	1
-20	127-6730-09	SHAFT	1
-21	D5901-001110	BALL, steel, 7/16	1
-22	M109-1015-94	SPRING, compression, stainless	1
-23	124-0730-05	HOLDER, spring	1
-24	C5030-005081	SET-SCREW, flat-point, 5 x 8	1
-25	C5010-050401	BOLT, socket-head, 5 x 40	2
-26	C5035-006121	SET-SCREW, dog-point, 6 x 12	2
-27	C5030-006081	SET-SCREW, flat-point, 6 x 8	2
-28	127-3303-02	VALVE	2
-29	F100-240-02080	O-RING, P21	2
-30	H0023-0000-14	NOZZLE, coolant, HARA, PT3/8 x 250	1
	C7813-000222	ELBOW, street, M, 45°	1
-31	H0023-0000-15	NOZZLE, coolant, HARA, PT3/8 x 300	1
	C7813-000222	ELBOW, street, M, 45°	1
-32	127-3303-01	DISTRIBUTOR	1
-33	C7861-000012	PLUG, 1/4	1
-34	D2781-001632	JOINT, pipe, NTN A-16-PT1/2	1
-35	D7781-160300	PIPE, steel	1
-36	D2781-021632	JOINT, pipe, NTN B-16-PT1/2	1
-37	D7793-25300	HOSE, vinyl, with tetoron blade, 25 x 3000	1
-38	D2765-000351	CLAMP, wire, SUGITA AK-1035, 35	2
-39	D7872-002542	JOINT, hose, for vinyl, 3/4 (25)	2
-40	D2760-000442	COCK, handle, 3/4 TOA	1
-41	D5085-080251	BOLT, knob, 8 x 25	1
-42	D5800-006060	PUSHER	1
-43	127-6730-06	BLOCK	1
-44	C5010-080121	BOLT, socket-head, 8 x 12	2
-45	D7784-405002	PIPE, gas	1
-46	H0010-0012-68	ELBOW, NTN 90 90EF-PT3/4	1
-47	127-6730-67	NOZZLE	1
-48	C5010-120301	BOLT, socket-head, 12 x 30	8
29-49	127-6730-13-1	SUPPORT	1
-50	127-6730-12-1	SUPPORT	1
-51	C5010-050121	BOLT, socket-head, 5 x 12	16

SHEET NO. 29 COOLANT NOZZLE (Upper Turret)

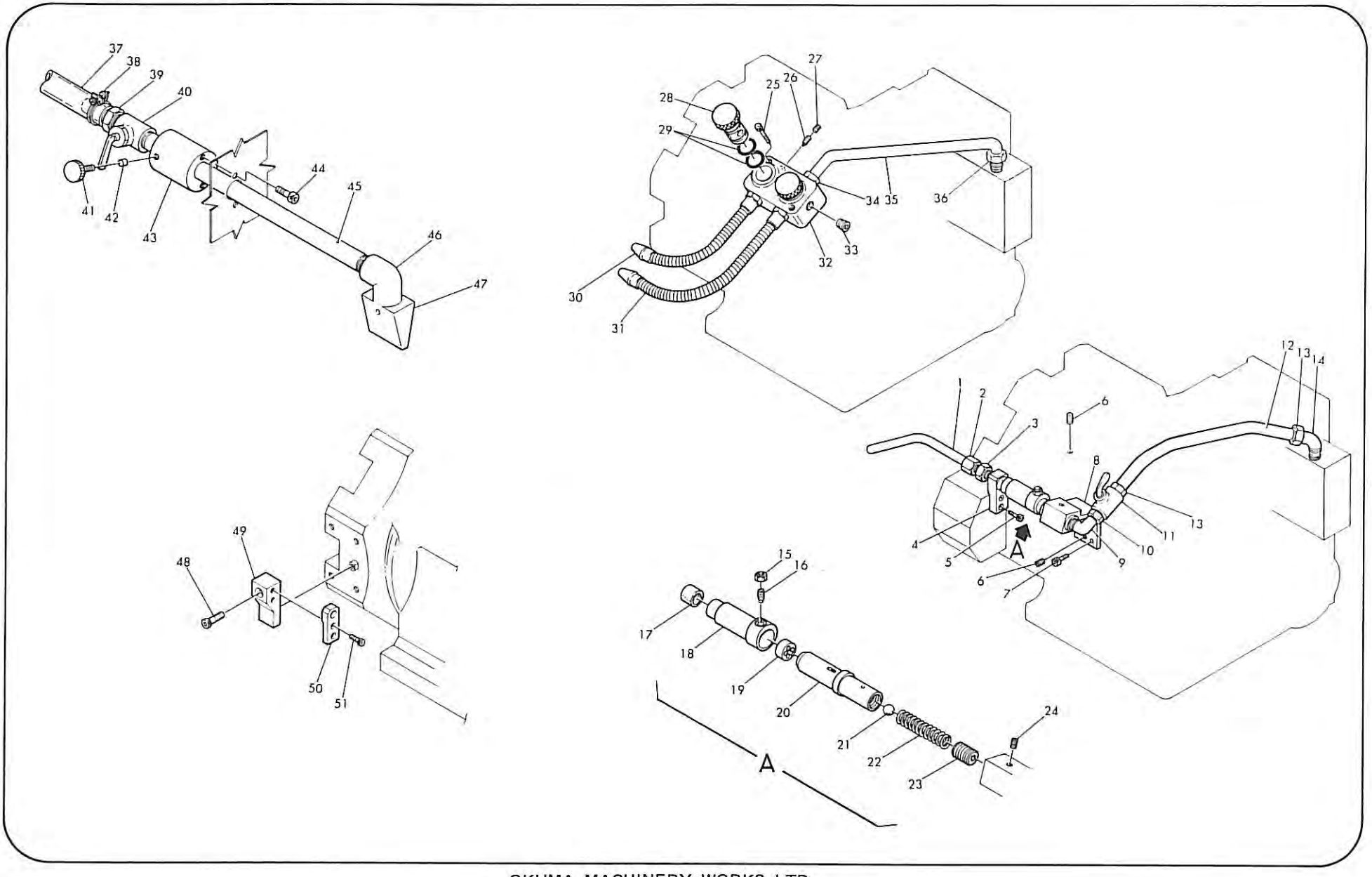

SHEET NO. 30 COOLANT NOZZLE (Lower Turret)

INDEX NO.	PART NO.	DESCRIPTION	Q'TY
30-1	D7780-403000	PIPE, copper, 8 x 300	16
-2	C7770-000042	NUT, pipe, F, 8	16
-3	C7720-000442	NIPPLE, F, TS, 8TS	16
-4	127-6730-12-1	SUPPORT	16
-5	C5010-050121	BOLT, socket-head, 5 x 12	32
-6	127-6730-08-1	BRACKET	1
-7	C5030-005081	SET-SCREW, flat-point	2
-8	D2760-000322	COCK, handle, 1/2	1
-9	D7870-010032	JOINT, hose, 1/2	1
-10	C7800-000322	NIPPLE, M, 1/2 x 3/8	1
-11	C7810-000222	ELBOW, M, 3/8	1
-12	D7782-000022	NIPPLE, barrel, 3/8	1
-13	07812-000222	NIPPLE, street, M, 3/8	1
-14	C5010-050141	BOLT, socket-head, 5 x 14	3
-15	C5030-005081	SET-SCREW, flat-point	1
-16	D2792-120702	HOSE, 70K, with fixtures, 12 x 700	1
-17	D7870-030032	JOINT, hose, 1/2, 45° elbow	1
-18	C7812-000332	ELBOW, street, 1/2	1
-19	C5030-005081	SET-SCREW, flat-point, 5 x 8	1
-20	C5031-006121	SET-SCREW, dog-point, 6 x 12	1
-21	C5110-000051	NUT, hex., #4, 5	1
-22	124-0730-05	HOLDER, spring	1
-23	M109-1015-94	SPRING, compression, stainless	1
-24	D5901-001110	BALL, steel, 7/16	1
-25	127-6730-09	SHAFT	1
-26	127-6730-18	PIN	1
-27	127-6730-10	SLEEVE	1
-28	H1023-1015-19	PACKING, rubber, M17 x 13	2
-29	127-3303-02	VALVE	2
-30	F100-240-02080	O-RING, P21	2
-31	C7861-000012	PLUG, 1/4	1
-32	C5010-050401	BOLT, socket-head, 5 x 40	2
-33	C5035-006121	SET-SCREW, dog-point, 6 x 12	2
-34	C5030-006081	SET-SCREW, flat-point, 6 x 8	2
-35	D2792-120602	HOSE, 70K, with fixtures, 12 x 600	1
-36	D7870-10032	JOINT, hose, YOKOHAMA, NIPPLE, 1/2 (12)	1
-37	127-3303-01	DISTRIBUTOR	1
-38	H0023-0000-15	NOZZLE, coolant, HARA, PT3/8 x 300	1
	C7813-000222	NOZZLE, coolant, HARA, PT3/8 x 300	1
-39	H0023-0000-16	NOZZLE, coolant, HARA, PT3/8 x 350	1
	C7813-000222	NOZZLE, coolant, HARA, PT3/8 x 350	1

SHEET NO. 30 COOLANT NOZZLE (Lower Turret)

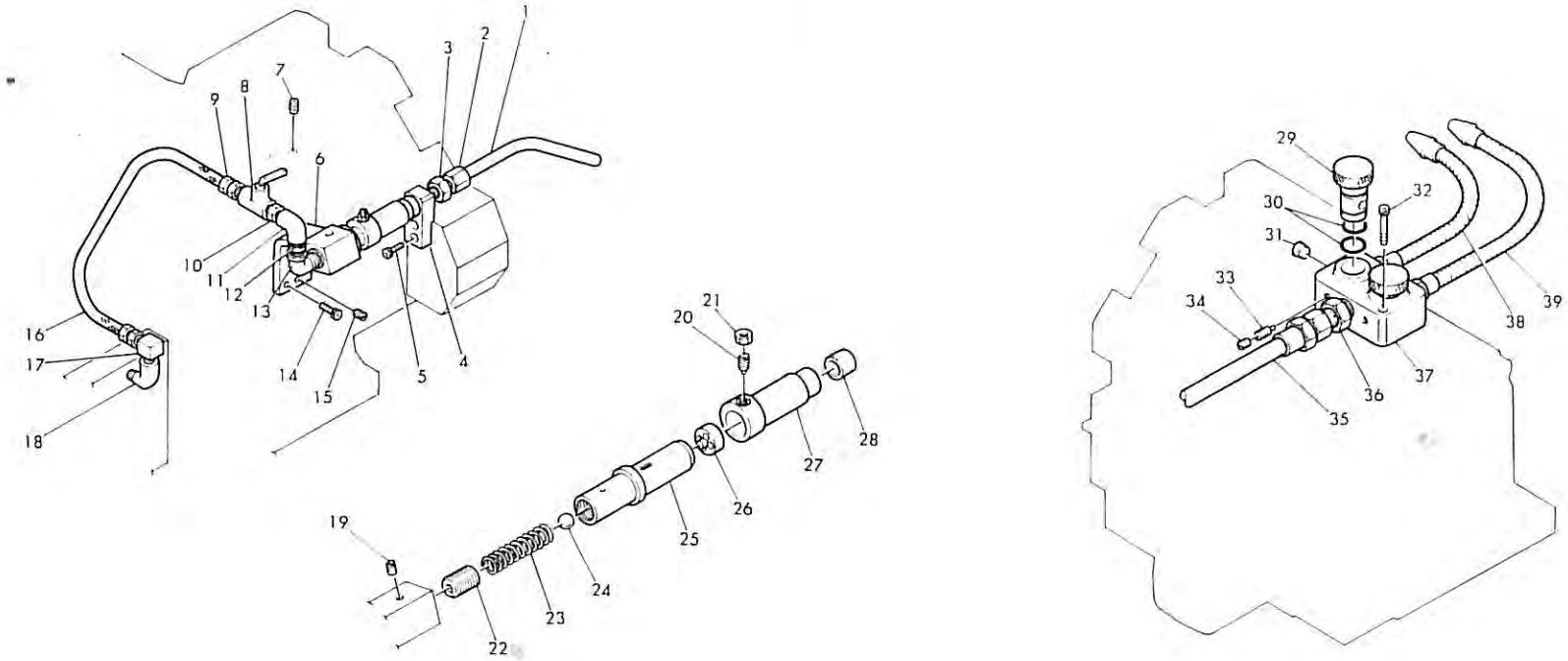

SHEET NO. 31 COOLANT SUPPLY EQUIPMENT

INDEX NO.	PART NO.	DESCRIPTION	Q'TY
		1ST Machine	
31-1	C7850-000042	PLUG, M, 3/4	1
-2	C7831-004342	TEE, street, M, 3/4 x 1/2 x 3/4	1
-3	C7812-000332	ELBOW, street, M, 1/2	1
-4	C5010-080201	BOLT, socket-head, 8 x 20	4
-5	F130-03-000-18	PUMP, clamp, CP-S182 (180W)	1
	F0130-04-000-34	PUMP, coolant, (IEC), CP-S182 (180W)	1
-6	C7812-000332	ELBOW, street, M, 1/2	1
-7	C5010-080201	BOLT, socket-head, 8 x 20	4
-8	127-6730-01-1	BASE	1
-9	D7784-301802	PIPE, gas	1
-10	H0032-0001-92	VALVE, foot, 1/2	1
-11	127-6730-02-1	FILTER	1
		1SC, 2ST Machine	
-12	D7872-001932	JOINT, vinyl hose, 1/2	1
-13	C7820-000442	BEND, M, 3/4	1
-14	C7850-000042	PLUG, M, 3/4	1
-15	C7831-004342	TEE, street, M, 3/4 x 1/2 x 3/4	1
-16	D7782-000042	NIPPLE, barrel, 3/4	1
-17	C7812-000332	ELBOW, street, M, 1/2	1
-18	C5010-080201	BOLT, socket-head, 8 x 20	4
-19	F130-03-000-18	PUMP, coolant, OP-S182 (180W)	1
	F0130-04-000-34	PUMP, coolant, (IEC), CP-S182 (180W)	1
-20	C7812-000332	ELBOW, street, M, 1/2	1
-21	D7784-300802	PIPE, gas, 1/2 x 80	1
-22	07810-000332	ELBOW, M, 1/2	1
-23	D7784-300702	PIPE, gas, 1/2 x 70	1
-24	C7810-000332	ELBOW, M, 1/2	1
-25	C5010-080201	BOLT, socket-head, 8 x 20	4
-26	127-6730-14	BASE	1
-27	D7784-300902	PIPE, gas, 1/2 x 90	1
-28	H0032-0001-92	VALVE, foot	1
-29	127-6730-05-1	FILTER	1
-30	127-6730-03		1
-31	C5010-080201	BOLT, socket-head, 8 x 20	4
-32	C5010-050121	BOLT, socket-head, 5 x 12	2
-33	F019-0001-17	PUMP, cycle, SHOWA, SMA-3-5	1

SHEET NO. 31 COOLANT SUPPLY EQUIPMENT

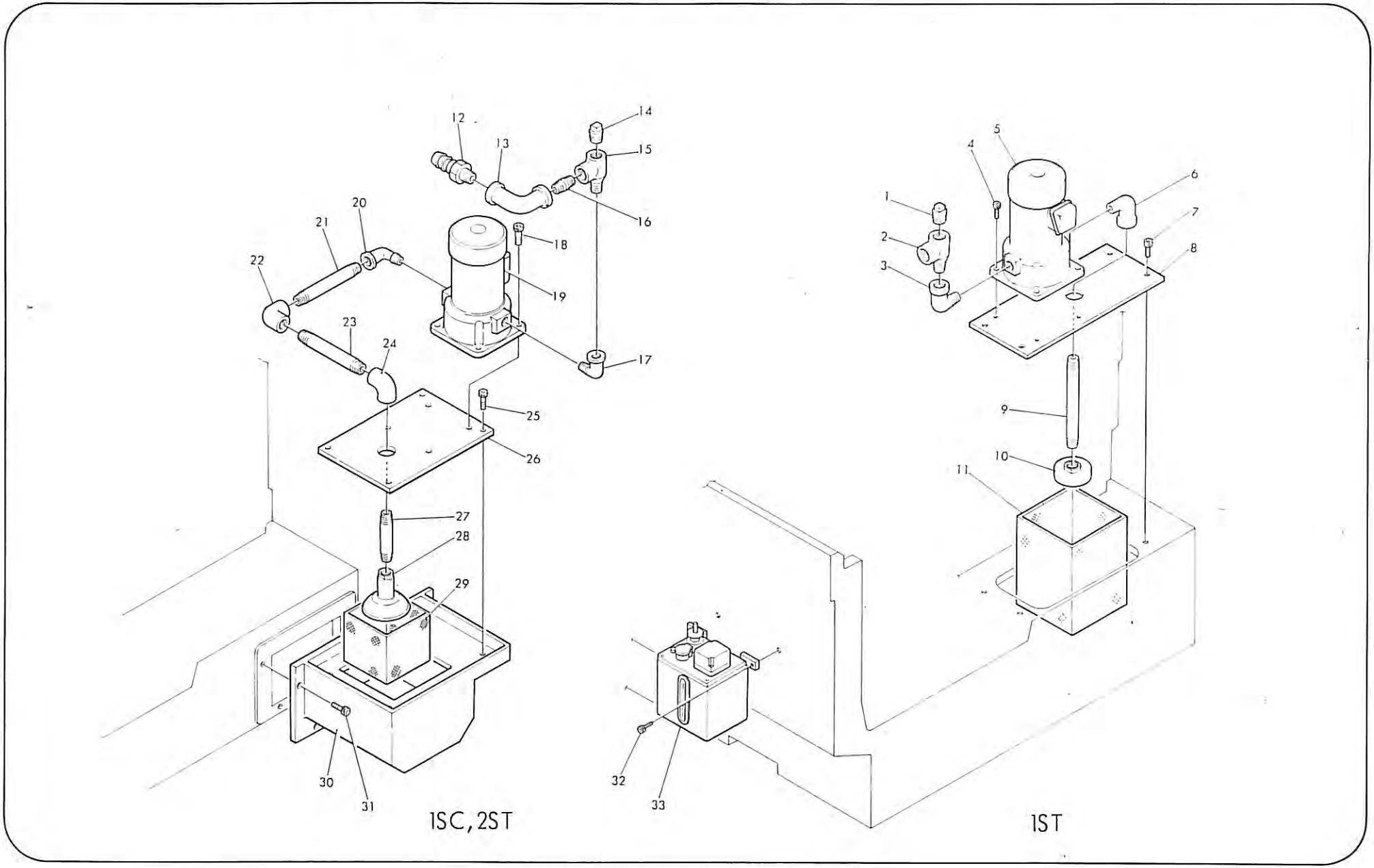

SHEET NO. 32 LEFT END COVER AND PTR

INDEX NO.	PART NO.	DESCRIPTION	Q'TY
32-1	H1004-0001-36	WASHER, polished, SPC-C, M5.5 x M18 x 1	2
-2	C5040-005141	SCREW, pan-head, 5 x 14	2
-3	127-6100-02-3	COVER	1
-4	H1004-0001-36	WASHER, polished, SPC-C, M5.5 x M18 x 1	2
-5	C5040-005141	SCREW, pan-head, 5 x 14	2
-6	127-6100-01-5	COVER	1
-7		PANEL, control	1
-8	C5110-000061	NUT, hex., #4, 6	2
-9	C5160-000061	WASHER, spring, 2	6
-10	127-6100-03-2	COVER	1
-11	121-0803-06-1	HANDLE	2
-12	127-6100-07	COVER, motor, (IEC)	1
-13	C5040-005101	SCREW, pan-head, 5 x 10, (IEC)	7
-14	C5110-000051	NUT, hex., #4, 5	7
-15	C5040-005401	SCREW, pan-head, 5 x 40	1
-16	H1004-0001-36	WASHER, polished, SPC-C, M5.5 x M18 x 1	1
-17	C5010-050101	BOLT, socket-head, 5 x 10	2
-18	H1004-0001-36	WASHER, polished, SPC-C, M5.5 x M18 x 1	2
-19	C5041-080161	BOLT, socket-head, 8 x 16	2
-20	127-0700-17-1	SUPPORT	1
-21	C5040-005401	SCREW, pan-head, 5 x 40	1
-22	H1004-0001-36	WASHER, polished, SPC-C, M5.5 x M18 x 1	1
-23	127-6100-06	SUPPORT	1
-24	C5040-005101	SCREW, pan-head, 5 x 10	2
-25	127-6100-06	SUPPORT	1
-26	C5040-005101	SCREW, pan-head, 5 x 10	2
-27	C5000-120251	BOLT, 12 x 25	4
-28	C5150-000121	WASHER, polished, 12	4
-29	127-7010-03	SUPPORT	1
-30	C5040-005101	SCREW, pan-head, 5 x 10	4
-31	H1004-0001-36	WASHER, polished, SPC-C, M5.5 x 18 x 1	4
-32	127-7010-02	SUPPORT	1
-33	C5140-000121	WASHER, polished, 12	4
-34	C5000-120201	BOLT, 12 x 20	4
-35	C5040-005081	SCREW, pan-head, 5 x 8	4
-36	127-7100-02-2	COVER	1
-37	127-7100-01-2	BOX, terminal	1
-38	C5110-000051	NUT, hex., #4, 5	4
-39	C5010-080161	BOLT, socket-head, 8 x 16	2
-40		READER, tape	1
-41	127-6100-05-1	COVER	1
-42	C5140-000051	WASHER, polished, 5	2
-43	C5040-005101	SCREW, pan-head, 5 x 10	2
-44	C5140-000051	WASHER, polished, 5	2
-45	C5040-005101	SCREW, pan-head, 5 x 10	2
-46	C5000-100161	BOLT, 10 x 16	3
-47	C5140-000101	WASHER, polished, 10	3
-48	127-0000-19	SUPPORT	1
-49	C5140-000101	WASHER, polished, 10	3
-50	C5000-100161	BOLT, 10 x 16	3

SHEET NO. 32 LEFT END COVER AND PTR

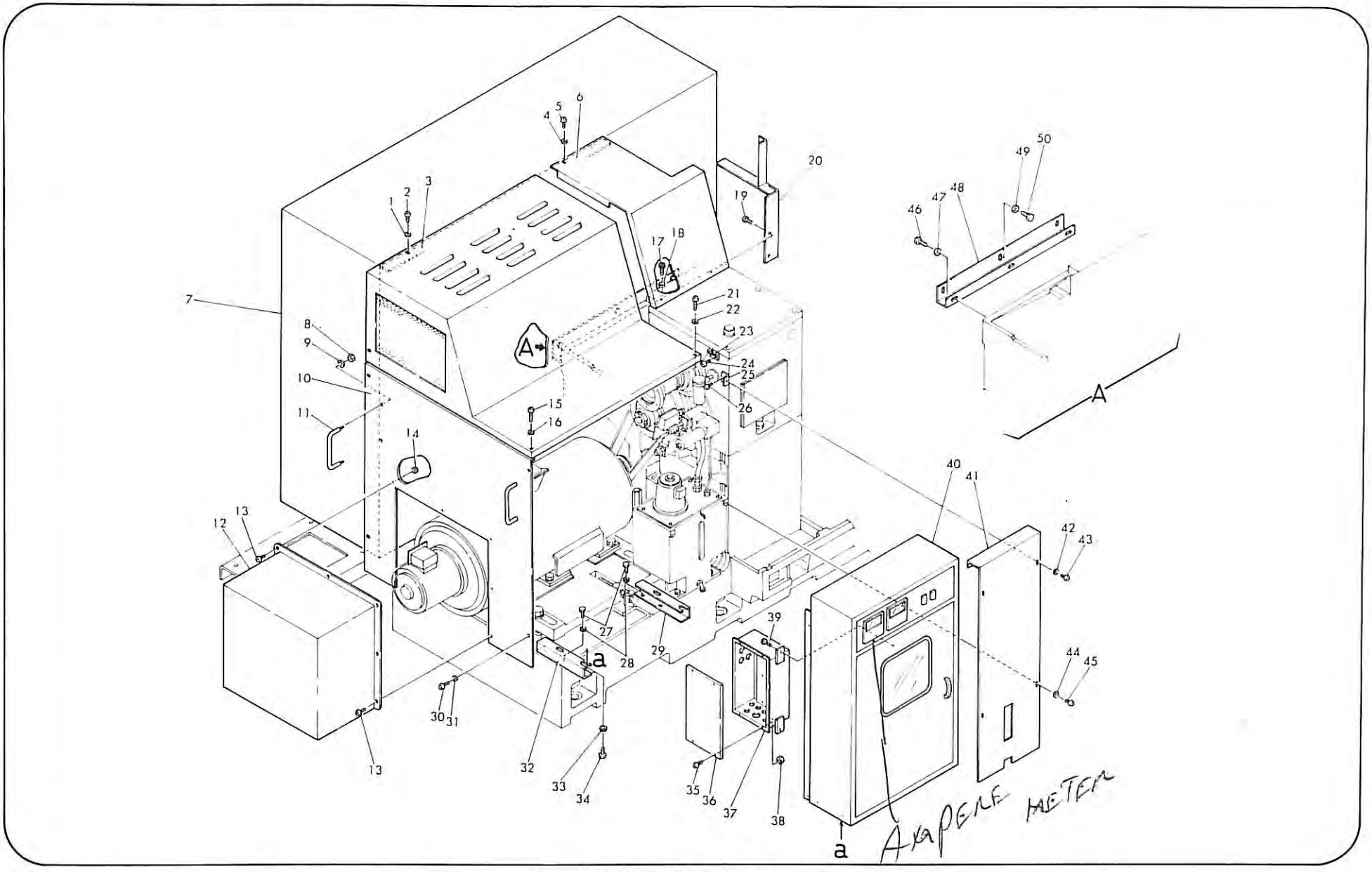

SHEET NO. 33 FRONT SLIDING CHIP GUARD, – 2ST –

INDEX NO.	PART NO.	DESCRIPTION	Q'TY
33-1	127-0702-24-1	HOLDER	1
-2	H1090-1001-98	BRUSH, channel	1
-3	H1020-1031-99	WIPER	1
-4	127-0702-25	HOLDER	1
-5	C5040-005081	SCREW, pan-head, 5 x 8	7
-6	127-0702-21-1	FRAME	1
-7	C5040-005121	SCREW, pan-head, 5 x 12	10
-8	C5140-000051	WASHER, polished, 5	10
-9	H1020-1032-05	WIPER	1
-10	127-0712-12	HOLDER	1
-11	C5040-005121	SCREW, pan-head, 5 x 12	12
-12	C5140-000051	WASHER, polished, 5	12
-13	127-0712-13	HOLDER	1
-14	127-0712-14	HOLDER	1
-15	127-0712-15	HOLDER	1
-16	C5040-005081	SCREW, pan-head, 5 x 8	4
-17	C5140-000051	WASHER, polished, 5	4
-18	127-0710-02	SUPPORT	1
-19	127-0710-03	SUPPORT	1
-20	127-0711-22-1	PLATE	1
-21	C5040-005081	SCREW, pan-head, 5 x 8	2
-22	C5140-000051	WASHER, polished, 5	6
-23	C5040-005101	SCREW, pan-head, 5 x 10	6
-24	H1023-0002-75	RUBBER, H, #416A ℓ = 2200	1
-25	H1022-1019-79	WINDOW	1
-26	127-0712-10-4	COVER, front	1
-27	C5160-000041	WASHER, spring, 4	6
-28	C5110-000041	NUT, hex., 4	6
-29	C5040-004061	SCREW, pan-head, 4 x 6	4
-30	H1042-1028-10-2	PLATE, name	1
	H1044-1014-19	PLATE, name	1
-31	H1040-1022-22	PLATE, name	1
-32	C5040-004081	SCREW, pan-head, 4 x 8	6
-33	C5160-000061	WASHER, spring, 6	4
-34	C5110-000061	NUT, hex., #4, 6	4
-35	C5100-00041	NUT, hex., 4	4
-36	C5100-00041	NUT, hex., 4	4
-37	121-0803-06-1	KNOB	1
-38	H1004-1014-24	PLATE, name	1
-39	C5040-004061	SCREW, pan-head, 4 x 6	4
-40	C5120-000101	NUT, cap, 10	4
-41	C5010-080121	BOLT, socket-head, 8 x 12	6
-42	127-0702-59	PLATE	2
-43	H1020-1034-84	PACKING	2
-44	127-0710-01-1	LATTICE	1
-45	C5140-000051	WASHER, polished,	12
-46	C5040-005121	SCREW, pan-head, 5 x 12	12
-47	C5140-000051	WASHER, polished, 5	2
-48	C5040-005081	SCREW, pan-head, 5 x 8	2
-49	127-0712-11-1	PLATE	1

INDEX NO.	PART NO.	DESCRIPTION	Q'TY
33-50	C5100-000051	NUT, hex., #3, 5	12
-51	127-0711-17-2	PLATE	1
-52	C5030-006081	SET-SCREW, flat-point, 6 x 8	2
-53	M001-AS1103	BEARING, AS1103 M17 x 30 x 1	8
-54	M001-AXK1103	BEARING, AXK1103 M17 x 30 x 2	8
-55	M001-AS1103	BEARING, AS1103 M17 x 30 x 1	8
-56	C5010-080161	BOLT, socket-head, 8 x 16	8
-57	M001-HK1712	BEARING, HK1712 M17 x 23 x 12	4
-58	C5010-050101	BOLT, socket-head, (IEC), 5 x 10	3
-59	127-0711-18	ROLLER	4
-60	127-0711-19	SHAFT	4
-61	127-0700-31	DOG (IEC)	1
-62	127-0002-11	RAIL	1
-63	127-0701-35	SUPPORT	1
-64	C5010-050161	BOLT, socket-head, 5 x 16	6
-65	C5140-000051	WASHER, polished, 5	6
-66	127-0702-34-1	SUPPORT	1
-67	C5140-000051	WASHER, polished, 5	4
-68	C5040-005081	BOLT, socket-head, 5 x 8	4
-69	C5010-050101	BOLT, socket-head, (IEC), 5 x 10	4
-70	127-0700-35-1	SUPPORT, (IEC)	1
-71	C5010-060141	BOLT, socket-head, (IEC), 6 x 14	4
-72	C5160-000061	WASHER, spring, (IEC), 6	4
-73	E3012-397-013	LIMIT-SWITCH, WLCA2, (IEC), TATEISHI	2

SHEET NO. 33 FRONT SLIDING CHIP GUARD, – 2ST –

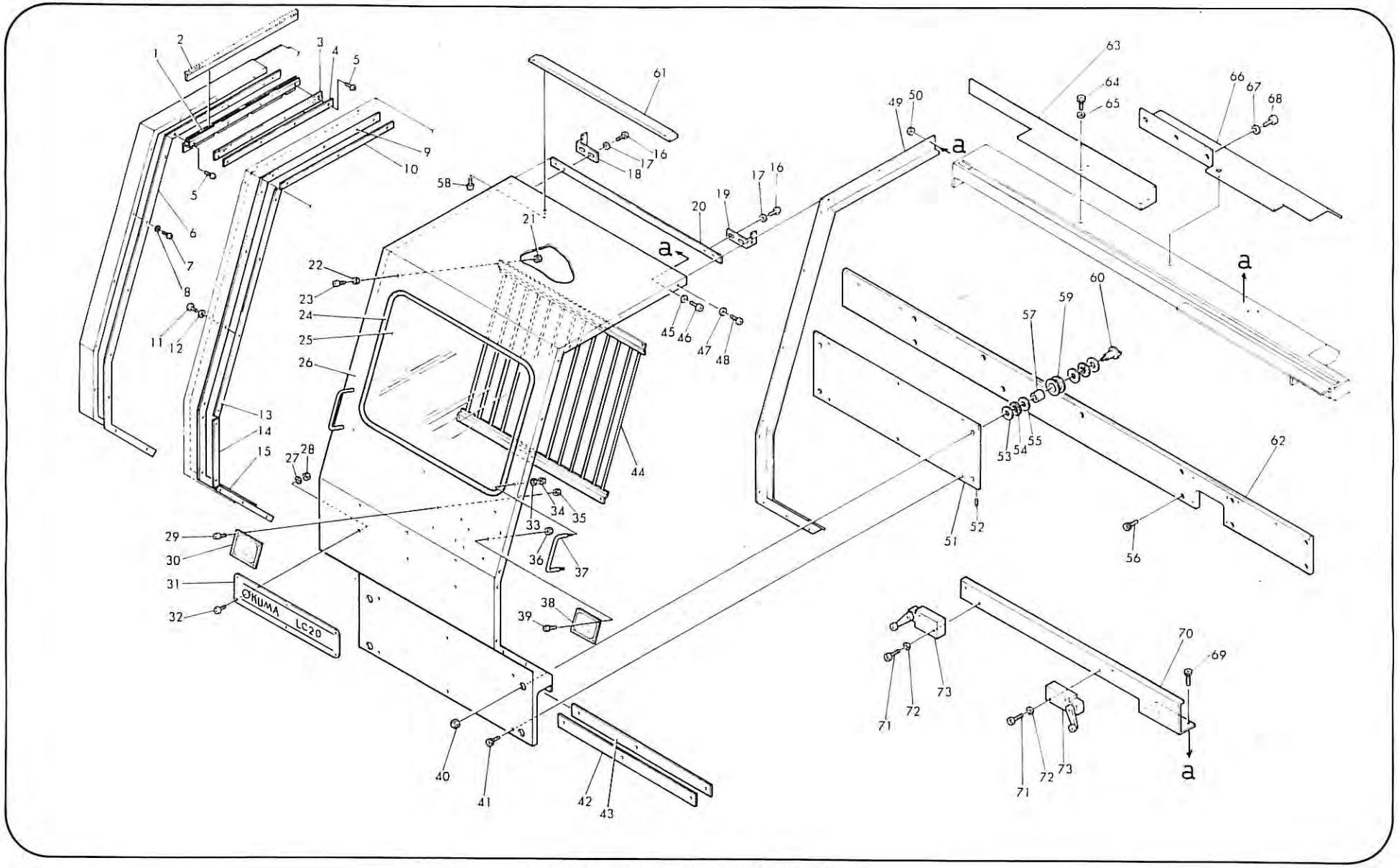

OKUMA MACHINERY WORKS LTD.

SHEET NO. 34 COVER AND OTHER PARTS, –2ST–

INDEX NO.	PART NO.	DESCRIPTION	Q'TY
34-1	C5020-080251	BOLT, T, 8 x 25	2
-2	127-6101-08-1	COVER, chuck	1
-3	D5103-000081	NUT, 8	2
-4	127-0702-26-1	COVER	1
-5	C5030-005061	SET-SCREW, flat-point, 5 x 10	2
-6	C5040-005081	SCREW, pan-head, 5 x 8	5
-7	C5040-005081	SCREW, pan-head, 5 x 8	2
-8	127-0702-27	COVER	1
-9	C5040-005121	SCREW, pan-head, 5 x 12	1
-10	C5040-005081	SCREW, pan-head, 5 x 8	7
-11	C5140-000051	WASHER, polished, 5	27
-12	C5040-005081	SCREW, pan-head, 5 x 8	6
-13	C5040-005081	SCREW, pan-head, 5 x 8	6
-14	127-6300-07-2	COVER, saddle	1
-15	127-6300-11	SUPPORT	1
-16	127-6300-06-2	COVER, saddle	1
-17	127-6101-07-2	COVER, chuck	1
-18	127-0702-20-1	COVER	1
-19	C5040-005081	SCREW, pan-head, 5 x 8	2
-20	C5140-000051	WASHER, polished, 5	2
-21	127-0702-33-3	SUPPORT	1
-22	C5040-005101	SCREW, pan-head, 5 x 10	8
-23	H1032-0002-23	FELT, □8 x 920ℓ	1
-24	127-6300-09-1	COVER	1
-25	C5140-000081	WASHER, polished, 8	2
-26	C5010-080121	BOLT, socket-head, 8 x 12	2
-27	E3528-801-006	GUARD, type-LS	1
-28	E3525-801-003	BLUB, lamp, LL007311 100V 75W	1
-29	E3528-801-006	HOOD, YK25157	1
-30	E3527-801-002	SOCKET, lamp, YA58202	1
-31	127-6510-03	JOINT	1
-32	C5010-050101	BOLT, socket-head, 5 x 10	3
-33	D7784-300802	PIPE, gas, 1/2 x 80	1
-34	C7810-000332	ELBOW, M, 1/2	1
-35	D7784-302202	PIPE, gas, 1/2 x 220	1
-36	C7805-000332	SOCKET, M, 1/2	1
-37	E3528-801-005	JOINT, type-I YK25120	1
-38	C5140-000081	WASHER, polished, 8	2
-39	C5010-080121	BOLT, socket-head, 8 x 12	2
-40	127-0700-24	COVER	1
-41	C5040-005081	SCREW, pan-head, 5 x 8	4
-42	127-0700-22	SUPPORT	1
-43	127-0700-23	COVER	1
-44	C5040-050101	SCREW, pan-head, 5 x 10	4
-45	127-0231-09-2	SUPPORT	1
-46	C5010-080201	BOLT, socket-head, 8 x 20	2
-47	C5010-050101	BOLT, socket-head, 5 x 10	2
-48	127-6602-08	COVER	1
-49	127-6602-07	DUCT (127-6602-01)	1
-50	C5040-005081	SCREW, pan-head, 5 x 8	4
-51	C5140-000051	WASHER, polished, 5	4
-52	127-0231-14-1	BOX, terminal	1
-53	127-0231-15	COVER	1
-54	C5040-005101	SCREW, pan-head, 5 x 10	4
-55	C5040-005101	SCREW, pan-head, 5 x 10	4
-56	C5040-005081	SCREW, pan-head, 5 x 8	2
-57	127-0220-02	COVER	1
-58	C5100-000051	NUT, hex., #3, 5	6
-59	C5160-000051	WASHER, spring	6
-60	127-0220-04	PLATE	3
-61	M109-1017-33-1	BAND, steel	1
-62	C5100-000051	NUT, hex., #3, 5	6
-63	127-0220-04	PLATE	3
-64	127-0222-01-1	CLAMP, pipe	3
-65	C5040-005081	SCREW, pan-head, 5 x 8	4
-66	C5140-000051	WASHER, polished, 5	4
-67	127-6602-10	SUPPORT	1
-68	C5010-050101	BOLT, socket-head, 5 x 10	4
-69	127-6602-11	COVER	1
-70	C5010-050101	BOLT, socket-head, 5 x 10	4
-71	C5010-080201	BOLT, socket-head, 8 x 20	4
-72	127-6602-09	COVER	1
-73	C5040-005101	SCREW, pan-head, 5 x 10	7
-74	C5010-080501	BOLT, socket-head, 8 x 50	4
-75	127-0000-10-1	SUPPORT	1
-76	C5010-160351	BOLT, socket-head, 16 x 35	4
-77	C5040-005101	SCREW, pan-head, 5 x 10	3
-78	C5140-000051	WASHER, polished, 5	3
-79	127-0700-27	PLATE	1
-80	H1020-1030-90	WIPER	1
-81	H1020-1030-91	WIPER	1
-82	127-0700-28	PLATE	1
-83	127-6300-08-1	COVER	1
-84	C5040-005081	SCREW, pan-head, 5 x 8	5
-85	C5040-005101	SCREW, pan-head, 5 x 10	5
-86	C5140-000051	WASHER, polished, 5	5
-87	C5040-005081	SCREW, pan-head, 5 x 8	4
-88	127-0700-29	COVER	1
-89	C5040-005081	SCREW, pan-head, 5 x 8	3
-90	C5140-000051	WASHER, polished, 5	3

INDEX NO.	PART NO.	DESCRIPTION	Q'TY
34-91	C5040-005101	SCREW, pan-head, 5 x 10	5
-92	127-0702-09	PLATE	1
-93	127-0702-08	PLATE	1
-94	H1020-1032-02-1	WIPER	1
-95	C5040-005081	SCREW, pan-head, 5 x 8	1
-96	C5140-000051	WASHER, polished, 5	1
-97	127-0702-28-1	COVER	1
-98	C5140-000051	WASHER, polished, 5	1
-99	C5040-005081	SCREW, pan-head, 5 x 8	1
-100	127-0702-06	SUPPORT	1
-101	C5040-005101	SCREW, pan-head, 5 x 10	2
-102	C5110-000061	NUT, hex., 6	2
-103	C5160-000061	WASHER, spring, 6	2
-104	C5040-005101	SCREW, pan-head, 5 x 10	1
-105	C5140-000051	WASHER, polished, 5	7
-106	C5040-005081	SCREW, pan-head, 5 x 8	7
-107	C5100-000051	NUT, hex., #3, 5	3
-108	127-0702-30	HOLDER	1
-109	C5040-005101	SCREW, pan-head, 5 x 10	3
-110	C5100-000051	NUT, hex., #3, 5	3
-111	C5010-050141	BOLT, socket-head, 5 x 14	3
-112	C5100-000051	NUT, hex., #3, 5	3
-113	C5040-005101	SCREW, pan-head, 5 x 10	3
-114	121-0803-061	HANDLE	1
-115	127-0702-31	COVER	1
-116	H1020-1032-04	SHEET	1
-117	127-0702-32	HOLDER	1
-118	H1022-1018-91	PACKING	1
-119	127-0002-06	SUPPORT	1
-120	C5010-050101	BOLT, socket-head, 5 x 10	2
-121	127-0702-29-1	COVER	1
-122	C5040-005101	SCREW, pan-head, 5 x 10	3
-123	C5140-000051	WASHER, polished, 5	3
-124	127-0700-19	PLATE, holder	1
-125	H1020-1030-89	WIPER	1
-126	127-0700-18-1	COVER	1
-127	C5140-000051	WASHER, polished, 5	6
-128	C5040-005081	SCREW, pan-head, 5 x 8	6
-129	C5040-005081	SCREW, pan-head, 5 x 8	3
—130	H1020-1030-88	WIPER	1
-131	127-0700-20	PLATE, holder	1
-132	127-0700-21	PLATE, holder	1
-133	C5040-005081	SCREW, pan-head, 5 x 8	5
-134	C5040-00581	SCREW, pan-head, 5 x 8	2
-135	C5040-005081	SCREW, pan-head, 5 x 8	2
-136	H1020-1032-01	PACKING	1
-137	127-0702-22	PUSHER	1
-138	127-0702-35	GUTTER	1
-139	C5140-000051	WASHER, polished, 5	2
-140	C5010-050101	BOLT, socket-head, 5 x 10	2
-141	127-0700-25	PLATE	1
-142	C5040-005081	SCREW, pan-head, 5 x 8	5
-143	H1020-1030-84	SHEET	1
-144	C5040-005081	SCREW, pan-head, 5 x 8	5
-145	C5140-000051	WASHER, polished, 5	5
-146	127-0700-26	PLATE	1
-147	C5110-000051	NUT, hex., #3, 5	12
-148	C5160-000051	WASHER, spring, 5	6
-149	127-0220-04	PLATE	3
-150	C5110-000051	NUT, hex., #3, 5	4
-151	C5140-000051	WASHER, polished, 5	4
-152	C5040-005081	SCREW, pan-head, 5 x 8	4
-153	127-0220-03-1	CLAMP, pipe	1
-154	M109-1017-49-1	BAND, steel	1
-155	127-0220-04	PLATE	3
-156	127-0220-03-1	CLAMP, pipe	3
-157	C5140-000051	WASHER, polished, 5	4
-158	C5040-005081	SCREW, pan-head, 5 x 8	4
-159	127-0220-03-1	CLAMP, pipe	1
-160	127-0222-02	SUPPORT	1
-161	C5110-000051	NUT, hex.	4
-162	C5010-080161	BOLT, socket-head, 8 x 16	3
-163	C5040-005081	SCREW, pan-head	2
-164	H1004-0001-36	WASHER, polished, SPC, -C	2
-165	127-6300-04	SUPPORT	1
-166	C5010-080121	BOLT, socket-head, 8 x 12	2
-167	C5040-005081	SCREW, pan-head, 5 x 8	2
-168	H1004-0001-36	WASHER, polished, SPC, -C	2
-169	C5010-080121	BOLT, socket-head, 8 x 12	2
-170	127-6300-02	SUPPORT	1
-171	127-6300-10	SUPPORT	1
-172	H1020-1032-03	SHEET	1
-173	C5010-050141	BOLT, socket-head	3
-174	127-0702-12	COLLAR	3
-175	127-0702-11	SUPPORT	1
-176	C5010-050121	BOLT, socket-head	1
-177	C5140-000051	WASHER, polished	1
-178	127-0702-60	STOPPER	1
-179	H1030-1001-77	STOPPER	1
-180	C5040-005101	SCREW, pan-head, 5 x 10	1

SHEET NO. 34 COVER AND OTHER PARTS, – 2ST –

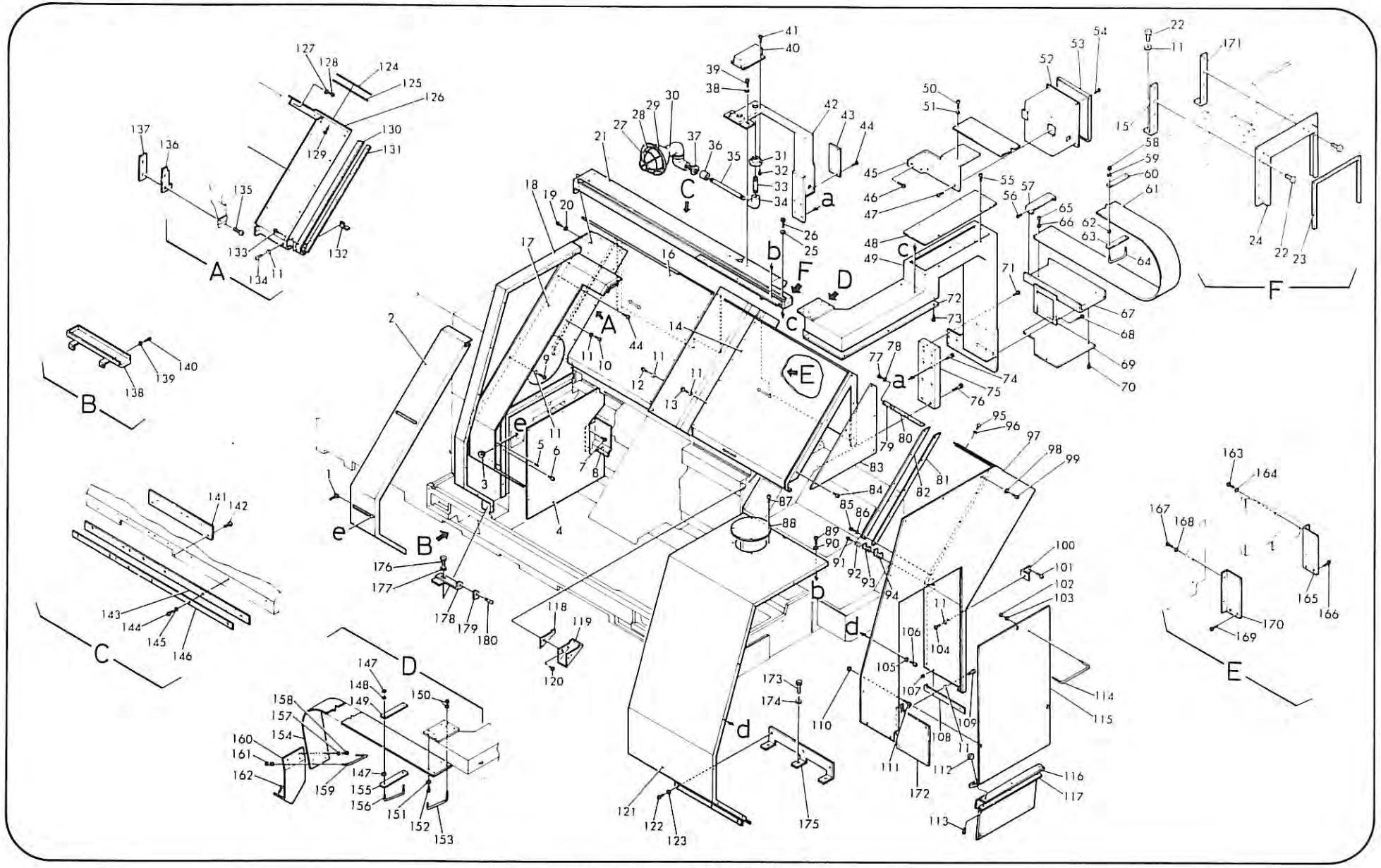

OKUMA MACHINERY WORKS LTD.

SHEET NO. 35 CHIP CONVEYOR

INDEX NO.	PART NO.	DESCRIPTION	Q'TY
35-1	127-6750-13	GUIDE, chip	1
-2	C5040-005081	SCREW, pan-head, 5 x 8	2
-3	C5040-005081	SCREW, pan-head, 5 x 8	3
-4	127-6750-19	PLATE	1
-5	127-6750-11	GUIDE, chip	1
-6	C5040-005081	SCREW, pan-head, 5 x 8	6
-7	C5140-000051	WASHER, polished, 5	6
-8	127-6750-12	GUIDE, chip	1
-9	C5110-000051	NUT, hex, #4, 5	2
-10	C5140-000051	WASHER, polished, 5	2
-11	C5040-005161	SCREW, pan-head, 5 x 16	2
-12	H0190-0003-68	CONVEYOR, chip, ENOMOTO, type-EC, L=26	1
-13	127-6750-10	GUIDE, chip	1
-14	127-6750-08	GUIDE, chip	1
-15	C5040-005081	SCREW, pan-head, 5 x 8	2
-16	127-6750-09	GUIDE, chip	1
-17	C5040-005081	SCREW, pan-head, 5 x 8	3
-18	C5040-005081	SCREW, pan-head, 5 x 8	4
-19	H0190-0003-68	CONVEYOR, chip, ENOMOTO type-EC, L=26	1
-20	127-6740-01	PAN, chip	1

SHEET NO. 35 CHIP CONVEYOR

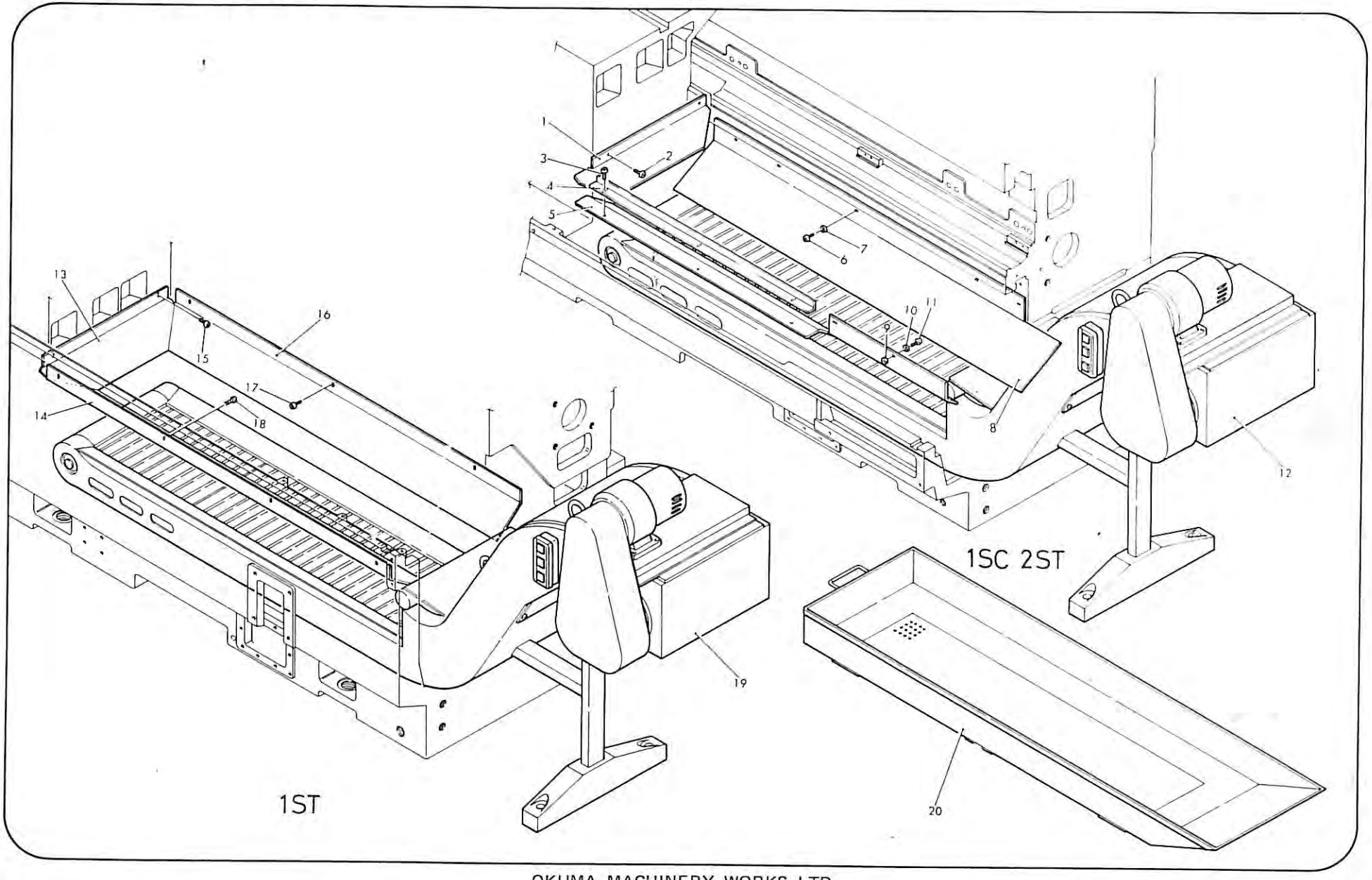

OKUMA MACHINERY WORKS LTD.

SHEET NO. 36 OPERATOR'S CONTROL PANEL, – 1ST –

INDEX NO.	PART NO.	DESCRIPTION	Q'TY
36-1	C5010-060161	BOLT, socket-head, 6 x 16	6
-2	C5140-000061	WASHER, polished, 6	6
-3	E0105-800-004	UNIT, operation panel	1
-4	E5040-004121	SCREW, pan-head, 4 x 12	8
-5	C5140-000041	WASHER, polished, 4	8
-6	E5040-004121	SCREW, pan-head, 4 x 12	4
-7	C5140-000041	WASHER, polished, 4	4
-8	E2800-031-037	SWITCH, pushbutton, Green	1
	E2808-031-017	COVER	1
-9	E8062-090-058	BOLT, 6 x 104.5	4
-10	E3702-655-001	CONNECTOR, BERG, 32 pin	1
-11	E8062-090-057	BOLT, 6 x 22	4
-12	C5140-000041	WASHER, polished, 4	4
-13	E5040-004121	SCREW, pan-head, 4 x 21	4
-14	E3732-391-005	CONNECTOR	1
	E3738-391-001	CONNECTOR, AT	1
-15	E2854-043-011	SWITCH, indication	9
	E2858-043-130	SWITCH, indication AT	9
	E5401-183-799	PLATE, name	9
-16	E3702-655-002	CONNECTOR, BERG, 54 pin	3
-17	E2854-043-011	SWITCH, indication	3
-18	E2800-031-037	SWITCH, pushbutton, Green	1
-19	E2801-031-005	SWITCH, pushbutton, Red	1
-20	E2840-552-012	SWITCH, toggle, 2-position	1
-21	E3051-291-016	HANDLE, manual pulse	1
-22	E2841-552-009	SWITCH, toggle, 3 position	1
-23	E2830-721-047-A	ROTARY-SWITCH	2
	E5545-721-002	KNOB	2
-24	E2841-552-009	SWITCH, toggle, 3 position	1
-25	E2851-031-057	SWITCH, indication, Green	1
-26	E2840-552-012	SWITCH, toggle, 2 position	1
-27	E2801-031-042	SWITCH, pushbutton, Red	1
-28	E5401-183-794	PLATE, name	1
-29	E2807-722-001	SWITCH, emergency button	1
-30	E2854-043-011	SWITCH, indication	1
	E2858-043-130	SWITCH, indication AT	1
	E5401-183-799	PLATE, name	1
-31	E5401-183-749	PLATE, name	1
-32	E3701-082-007	CONNECTOR, 17-16	1
	E3708-082-028	CONNECTOR, AT	1
-33	E8030-183-483	PLATE, cover	1
-34	E3702-082-003	CONNECTOR, 17-16	1
	E3708-082-029	CONNECTOR, AT	1
-35	C5110-000081	NUT, M6, 8	4
-36	C5110-000041	NUT, M4	2
-37	C5140-000041	WASHER, polished, 4	2
-38		KNOB	1
-39	C5140-000041	WASHER, polished, 4	12
-40	E5040-004121	SCREW, pan-head, 4 x 21	12
-41	E7391-183-006	BOX, OSP3000 control (LC20, 30, 40)	1

INDEX NO.	PART NO.	DESCRIPTION	Q'TY
	E8040-183-265	BOX, OSP3000 control (LC10)	1
36-42		PACKING	1
-43		COVER	1
-44	C5010-080201	BOLT, socket-head, 8 x 20	4
-45	127-0030-03-1	FLANGE	1
-46	127-003-04-1	SUPPORT	1
-47	D5800-004060	PUSHER, 4 x 16	1
-48	D5085-050251	KNOB, bolt, 85 x 25	1
-49	D5201-008400	PIN, straight, 8 x 40	1
-50	C5010-080251	BOLT, socket-head, 8 x 25	4
-51	127-0030-07	ARM, control panel	1
-52	C5010-080201	BOLT, socket-head, 8 x 20	4

SHEET NO. 36 OPERATOR'S CONTROL PANEL, – 1ST –

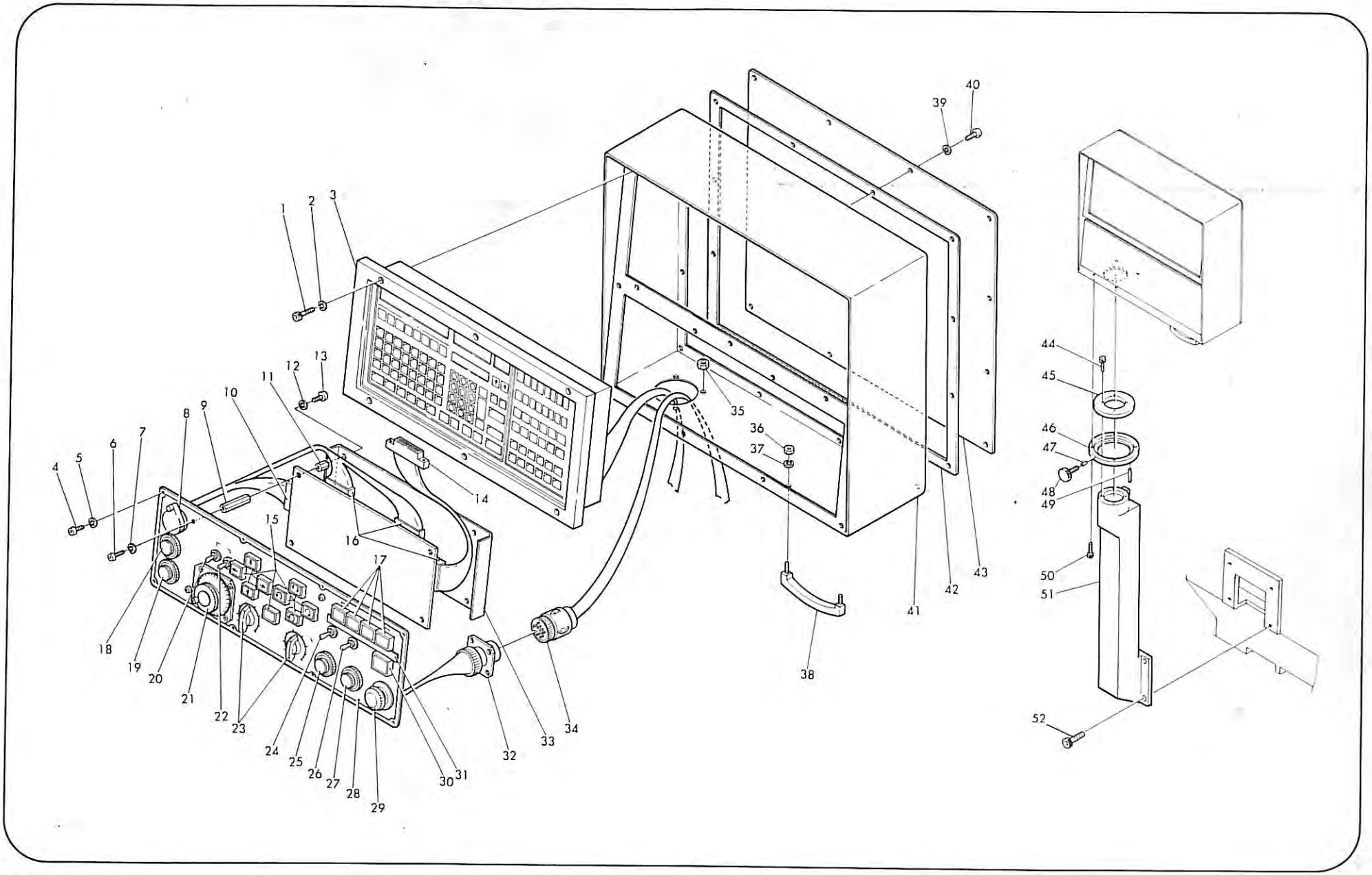

OKUMA MACHINERY WORKS LTD.

SHEET NO. 37 OPERATOR'S CONTROL PANEL, – 1SC/2ST –

INDEX NO.	PART NO.	DESCRIPTION	Q'TY
37-1	C5010-060161	BOLT, socket-head, 6 x 16	6
-2	C5140-000061	WASHER, polished, 6	6
-3	E0105-800-004	UNIT, operation panel	1
-4	E5040-004121	SCREW, pan-head, 4 x 12	8
-5	C5140-000041	WASHER, polished, 4	8
-6	E5040-004121	SCREW, pan-head, 4 x 12	4
-7	C5140-000041	WASHER, polished, 4	4
-8	E2800-031-037	SWITCH, pushbutton, Green	1
	E2808-031-017	COVER	1
-9	E8062-090-058	BOLT, 6 x 104.5	4
-10	E3702-655-001	CONNECTOR, BERG, 32 pin	1
-11	E8062-090-057	BOLT, 6 x 22	4
-12	C5140-000041	WASHER, polished, 4	4
-13	E5040-004121	SCREW, pan-head, 4 x 21	4
-14	E3732-391-005	CONNECTOR	1
	E3738-391-001	CONNECTOR, AT	1
-15	E2854-043-011	SWITCH, indication	9
	E2858-043-130	SWITCH, indication AT	9
	E5401-183-799	PLATE, name	9
-16	E3702-655-002	CONNECTOR, BERG, 54 pin	3
-17	E2854-043-011	SWITCH, indication	3
-18	E2800-031-037	SWITCH, pushbutton, Green	1
-19	E2801-031-005	SWITCH, pushbutton, Red	1
-20	E2840-552-012	SWITCH, toggle, 2-position	1
-21	E3051-291-016	HANDLE, manual pulse	1
-22	E2841-552-009	SWITCH, toggle, 3 position	1
-23	E2830-721-047-A	ROTARY-SWITCH	2
	E5545-721-002	KNOB	2
-24	E2841-552-009	SWITCH, toggle, 3 position	1
-25	E2851-031-057	SWITCH, indication, Green	1
-26	E2840-552-012	SWITCH, toggle, 2 position	1
-27	E2801-031-042	SWITCH, pushbutton, Red	1
-28	E5401-183-794	PLATE, name	1
-29	E2807-722-001	SWITCH, emergency button	1
-30	E2854-043-011	SWITCH, indication	1
	E2858-043-130	SWITCH, indication AT	1
	E5401-183-799	PLATE, name	1
-31	E5401-183-749	PLATE, name	1
-32	E3701-082-007	CONNECTOR, 17-16	1
	E3708-082-028	CONNECTOR, AT	1
-33	E8030-183-483	PLATE, cover	1
-34	E3702-082-003	CONNECTOR, 17-16	1
	E3708-082-029	CONNECTOR, AT	1
-35	C5110-000081	NUT, M6, 8	4
-36	C5110-000041	NUT, M4	2
-37	C5140-000041	WASHER, polished, 4	2
-38		KNOB	1
-39	C5140-000041	WASHER, polished, 4	12
-40	E5040-004121	SCREW, pan-head, 4 x 21	12
-41	E7391-183-006	BOX, OSP3000 control (LC20, 30 40)	1

INDEX NO.	PART NO.	DESCRIPTION	Q'TY
	E8040-183-265	BOX, OSP3000 control (LC10)	1
37-42		PACKING	1
-43		COVER	1
-44	C5010-080201	BOLT, socket-head, 8 x 20	4
-45	127-0030-03-1	FLANGE	1
-46	127-003-04-1	SUPPORT	1
-47	D5800-004060	PUSHER, 4 x 16	1
-48	D5085-050251	KNOB, bolt, 85 x 25	1
-49	D5201-008400	PIN, straight, 8 x 40	1
-50	C5010-080251	BOLT, socket-head, 8 x 25	4
-51	127-0030-08	ARM, control panel	1
-52	C5010-080201	BOLT, socket-head, 8 x 20	4

SHEET NO. 37 OPERATOR'S CONTROL PANEL, – 1SC/2ST –

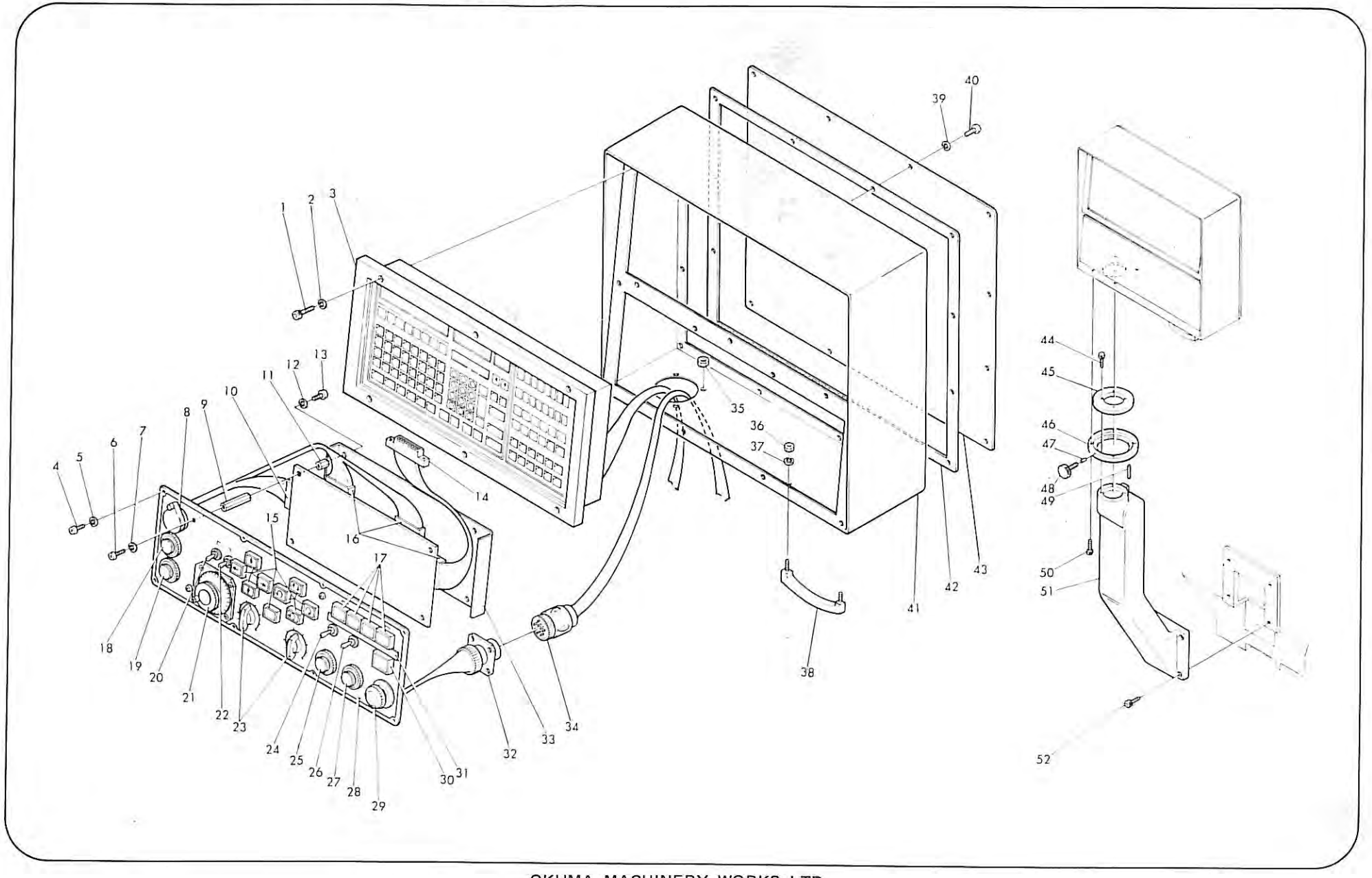

OKUMA MACHINERY WORKS LTD.

SHEET NO. 38 CHUCK AND TAILSTOCK PEDALS

INDEX NO.	PART NO.	DESCRIPTION	Q'TY
		I CHUCK PEDAL (Standard)	
38-1	E2860-119-001	SWITCH, foot, OFL-1-SM2.C	1
-2	C5010-060141	BOLT, socket-head, 6 x 14	3
-3	C5010-080161	BOLT, socket-head, 8 x 16	4
-4	127-000-21-1	SUPPORT, foot switch	1
		II 1ST CHUCK PEDAL with SAFY COVER	
-5	C5010-060141	BOLT, socket-head, 6 x 14	3
-6	E2860-119-005	SWITCH, foot, OFL-1-SM2, KS	1
-7	C5010-080161	BOLT, socket-head, 8 x 16	4
-8	127-0000-25	SUPPORT, foot switch	1
		III CHUCK PEDAL (double-type) (IEC)	
-9	C5070-000020	SCREW, NO2	2
-10	H1040-1021-99	PLATE, name	1
-11	C5076-000020	SCREW, NO2	2
-12	H1040-1021-98	PLATE, name	1
-13	E2860-119-003	SWITCH, foot	1
-14	C5010-050141	BOLT, socket-head, 5 x 14	2
-15	C5000-080201	BOLT, socket-head, 8 x 20	4
-16	127-0000-24	SUPPORT, foot switch	1
		IV 1 SC, 2ST CHUCK PEDAL with SAFTY COVER	
-17	C5010-060141	BOLT, socket-head, 6 x 14	3
-18	E2860-119-005	SWITCH, foot, OFL-1-SM2, KS	1
-19	127-0000-26	SUPPORT, foot switch	1
-20	C5010-080201	BOLT, socket-head, 8 x 20	4
		V TAILSTOCK PEDAL (Standard)	
-21	E2860-119-006	SWITCH, foot, OFL-TWY-2M2, C	1
-22	C5010-060141	BOLT, socket-head, 6 x 14	2
-23	127-6400-01	SUPPORT, foot switch	1
-24	C5000-080251	BOLT, hex., 8 x 25	4
		VI TAILSTOCK PEDAL (USA)	
-25	E2860-119-007	SWITCH, foot, OFL-TWY-SM2 KS	1
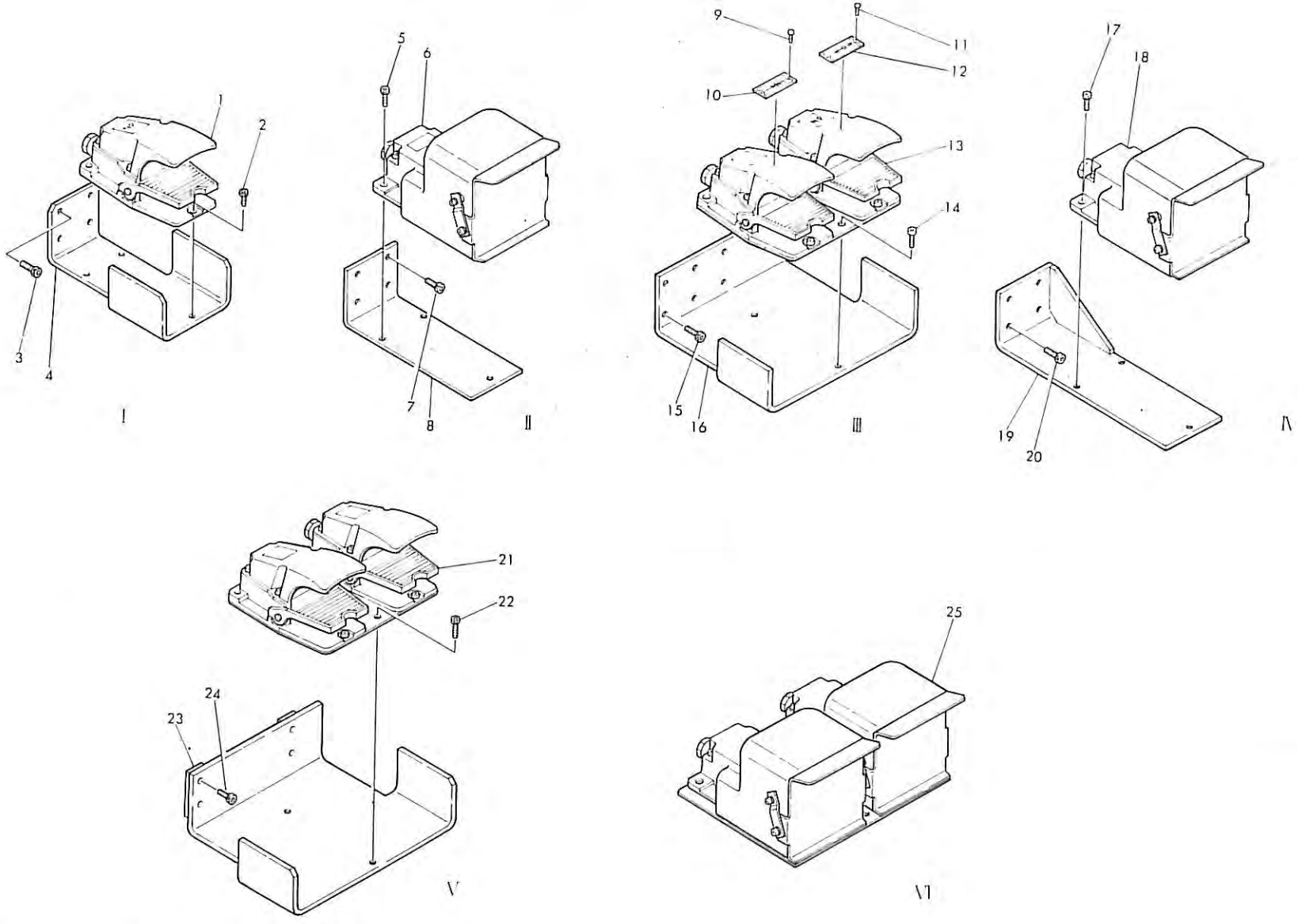
SHEET NO. 38 CHUCK AND TAILSTOCK PEDALS